Stainless Steel Valves

For Life sciences, Harsh Environments,
Food & Healthy Beverage Dispensing

Parker

ENGINEERING YOUR SUCCESS.

Parker Fluid Control Division Europe - FCDE

Parker Hannifin

Parker Hannifin is the world's leading diversified manufacturer of motion and control technologies and systems, providing precision-engineered solutions for a wide variety of commercial, mobile, industrial, life science and aerospace markets.

The company's products are vital to virtually everything that moves or requires control, including the manufacture and processing of raw materials, durable goods, infrastructure development and all forms of transport.

Fluid Control Division Europe

The Fluid Control Division in Europe (FCDE) is a division of Parker Hannifin, the global leader in motion and control technologies.

FCDE core competences are the development and manufacturing of an extremely diverse range of fluid control products, including solenoid valves and pressure regulators.

Parker Fluidic Solutions (PFS) is a global designer and manufacturer of bespoke integrated system solutions. Renowned globally for solutions in high technology, fluid and motion control utilising advanced design and manufacturing techniques. PFS is focused on incorporating the best of Parker products into solutions designed for you.

History

Parker FCDE has been a leading player in the manufacturing and development of solenoid valve technologies for over 60 years, with continuous research and development bringing innovative solutions to the marketplace, for example leading the way in the utilisation of synthetic ruby for critical water applications or the unsurpassed reliability and precision of our pressure regulators. The expertise accumulated and developed through the years is evident in the superior quality of FCDE solutions.

Markets

Our products and solutions are typically designed for markets including Industrial Equipment, Industrial Automation, Mobile, Transportation, Life Sciences, Beverage dispensing and for Fluid and Process Control.

Benefits

The modular concept of our products, having separate solenoid valves and electrical parts, provides the customer with increased flexibility by allowing numerous combinations. This additional flexibility can enable distributors to greater reduce valve inventory levels, whilst retaining the same number of capabilities. Parker also has unrivalled experience in developing customised product solutions complying with the highest technical, environmental, energy and service life requirements.

Table of content

WARNING - USER RESPONSIBILITY

FAILURE OR IMPROPER SELECTION OR IMPROPER USE OF THE PRODUCTS DESCRIBED HEREIN OR RELATED ITEMS CAN CAUSE DEATH, PERSONAL INJURY AND PROPERTY DAMAGE.

•This document and other information from Parker-Hannifin Corporation, its subsidiaries and authorized distributors provide product or system options for further investigation by users having technical expertise.

• The user, through its own analysis and testing, is solely responsible for making the final selection of the system and components and assuring that all performance, endurance, maintenance, safety and warning requirements of the application are met. The user must analyze all aspects of the application, follow applicable industry standards, and follow the information concerning the product in the current product catalog and in any other materials provided from Parker or its subsidiaries or authorized distributors.

• To the extent that Parker or its subsidiaries or authorized distributors provide component or system options based upon data or specifications provided by the user, the user is responsible for determining that such data and specifications are suitable and sufficient for all applications and reasonably foreseeable uses of the components or systems.

201/202/301LG Series

Product Description

High grade material and corrosion resistant 201, 202, 301LG Valve Series is a complete range of 2 way and 3 way valves, direct acting, normally close and normally open.

This new range of solenoid valves, having AISI 316L grade stainless steel body, is the right answer for a wide range of applications in Food & Beverage Industry, Process industry, Wastewater treatment appliances, Marine, high temperature steam applications in aggressive environments or with aggressive media.

FFKM seal is available in order to increase mechanical, high temperature and aggressive media resistance for the most specific and demanding fluid control applications.

Thanks to the modular concept, a wide range of electrical parts can be used including ATEX, IP67, H class, reduced power, UL or VDE approved.

This selection of valves is NSF certified with mechanical ATEX approval available.

Applications

Market of interest:

- Life Sciences
- Food & Beverage Processing
- Commercial Equipment
- Industrial equipment
- Waste Water treatment

Typical applications:

- Water purification and preparation devices
- Food & Beverage processing, Healthy Beverage Dispense equipment
- Demineralized water shut off, cooling of medical and surgical devices
- Dishwasher disinfectors, Laboratory and high end hot steam sterilizers
- Compatible aggressive liquids shut-off
- Ammonia (with silver shading ring version)

Benefits

The most valuable features you will find in this product range:

- High grade corrosion resistant valve body, AISI 316L
- NSF certified references
- FFKM seal option for superior endurance in heavy duty conditions
- Modular concept: a wide range of electrical parts can be used with this family, including ATEX, low power, IP67, UL/VDE approved
- Robust and solid design

General Description

Materials in contact with the fluid

Valve Body & Seat:
AISI 316L Stainless Steel

Tube assembly:
AISI 303 Stainless Steel

Plungers:
AISI 430F Stainless Steel

Springs:
AISI 302 Stainless Steel

Seals:
FKM FDA, FFKM

Shading ring:
Copper: standard
Silver: according to notes

Installation

The valves can be mounted in any position. It is however recommended to install them with the coil in vertical position above the body.

Media

These valves have been developed to achieve the best performances with a wide range of media.

Coil

A wide range of coils can be used with this range.
The complete coil range is described in pages 45 to 69.

Temperature

The ambient temperature range of the valve is -10°C to +50°C. For ATEX environments, temperature can be limited by the max ambient temperature of the coil. See coil pages.

How to Order

A complete solenoid valve is composed by 2 elements: the **valve body** and the **coil**. 201LG Series pressure vessel is supplied with the standard housing integrated. Standard housing is composed by washer, nut and nameplate.

Step 1: Select the valve body reference needed. **Example: 301LG2NVG7**

Step 2: According the coil group, select coil + voltage code from page 45. **Example: D5C**

Step 3: Define the complete assembly numbering system. **Example: 301LG2NVG7D5C**

Step 4: Please note that you can order the plug seperatly if not included with the coil.
Example: 600003PLUG. Please check the coil range pages for more details.

201LG Series

High corrosion resistant valves

Direct Operated - Port size from 1/8" to 1/4" and orifice from 1.5mm to 3.0mm

316L Stainless St.

Pipe Mounting

Normally Closed

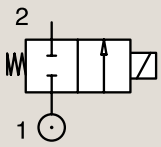

Port Size BSP	Orifice Ø mm	Flow Factors Kv l/min	Flow Factors KV m³/h	Operating Pressure Differential Min. Bar	Operating Pressure Differential Max. (MOPD) AC bar	Operating Pressure Differential Max. (MOPD) DC bar	Fluid Temperature Min. °C	Fluid Temperature Max. °C	Seat Seal	Parker Valves Valve Ref.	Parker Valves Coil Ref.	Power AC W	Power DC W	Coil Group	Drawing N°
1/8"	1.5	1.0	0.06	0	16	7	-10	140	FKM	201LG1GVG2	DF	2	2.5	1.1/1.3	1
	1.5	1.0	0.06	0	20	10	-10	140	FKM	201LG1GVG2	DG	4	5	1.1/1.3	1
	2.5	2.3	0.14	0	8	3	-10	140	FKM	201LG1LVG2	DF	2	2.5	1.1/1.3	1
	2.5	2.3	0.14	0	10	6	-10	140	FKM	201LG1LVG2	DG	4	5	1.1/1.3	1
1/4"	1.5	1.0	0.06	0	20	10	-10	140	FKM	201LG2GVG2	DG	4	5	1.1/1.3	1
	2.5	2.3	0.14	0	8	3	-10	140	FKM	201LG2LVG2	DF	2	2.5	1.1/1.3	1
	2.5	2.3	0.14	0	10	4	-10	140	FKM	201LG2LVG2	DG	4	5	1.1/1.3	1

Notes :
Nominal Pressure = 40 bar
All the references listed in this chart are NSF certified and use FDA compliant seals materials.

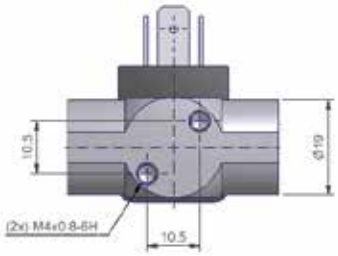

All dimensions are in mm

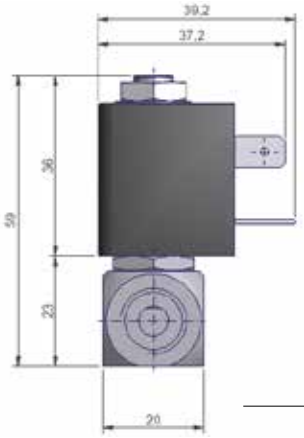

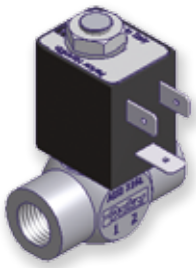

Dimensional Drawing N°1

	Port Size A	Orifice mm	kv L/min	MOPD bar	Fluid Temp. °C	Amb. Temp. °C
From	1/8"	1.5	1.0	6	-10	-10
To	1/4"	2.5	2.3	20	140	50

316L Stainless St.

Pipe Mounting

Normally Closed

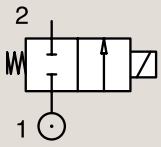

Port Size BSP	Orifice Ø mm	Flow Factors Kv l/min	Flow Factors KV m³/h	Operating Pressure Differential Min. Bar	Operating Pressure Differential Max. (MOPD) AC bar	Operating Pressure Differential Max. (MOPD) DC bar	Fluid Temperature Min. °C	Fluid Temperature Max. °C	Seat Seal	Parker Valves Valve Ref.	Parker Valves Coil Ref.	Power AC W	Power DC W	Coil Group	Drawing N°
1/4"	1.5	1.0	0.06	0	20	15	-10	180	FFKM	201LG2GKG7A[1]	D5	8	9	2.0/24.0	2
	3.0	4.5	0.27	0	9	5	-10	180	FFKM	201LG2NKG7A[1]	D5	8	9	2.0/24.0	2
	3.0	4.5	0.27	0	20	8	-10	180	FFKM	201LG2NKG7A[1]	DM	14	14	2.0/24.0	2
	3.0	4.5	0.27	0	9	5	-10	140	FKM	201LG2NVG7	D5	8	9	2.0/24.0	2
	3.0	4.5	0.27	0	20	8	-10	140	FKM	201LG2NVG7	DM	14	14	2.0/24.0	2
	3.0	4.5	0.27	0	9	5	-10	140	FKM	201LG2NVG7A[1]	D5	8	9	2.0/24.0	2

Notes :
1. With silver shading ring
Nominal Pressure = 40 bar
All the references listed in this chart are NSF certified and use FDA compliant seals materials.

2/2

201LG Series

High corrosion resistant valves

Direct Operated - Port size from 1/4" to 1/2" and orifice from 4.0mm to 6.2mm

316L Stainless St.

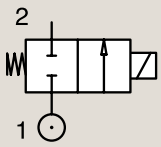

Pipe Mounting

Normally Closed

Port Size	Orifice Ø	Flow Factors		Operating Pressure Differential			Fluid Temperature		Seat Seal	Parker Valves		Power		Coil Group	Drawing N°
		Kv	KV	Min.	Max. (MOPD)		Min.	Max.				AC	DC		
BSP	mm	l/min	m³/h	Bar	AC bar	DC bar	°C	°C		Valve Ref.	Coil Ref.	W	W		
1/4"	4.0	7.0	0.42	0	10	4	-10	180	FFKM	201LG2QKG7A[1]	DM	14	14	2.0/24.0	2
	4.0	7.0	0.42	0	5	3	-10	140	FKM	201LG2QVG7	D5	8	9	2.0/24.0	2
	4.0	7.0	0.42	0	10	4	-10	140	FKM	201LG2QVG7	DM	14	14	2.0/24.0	2
	4.0	7.0	0.42	0	5	3	-10	140	FKM	201LG2QVG7A[1]	D5	8	9	2.0/24.0	2
	4.0	7.0	0.42	0	10	4	-10	140	FKM	201LG2QVG7A[1]	DM	14	14	2.0/24.0	2
	5.0	8.0	0.48	0	3	2	-10	180	FFKM	201LG2SKG7A[1]	D5	8	9	2.0/24.0	2
	5.0	8.0	0.48	0	8	2.5	-10	180	FFKM	201LG2SKG7A[1]	DM	14	14	2.0/24.0	2
	5.0	8.0	0.48	0	3	2	-10	140	FKM	201LG2SVG7	D5	8	9	2.0/24.0	2
	5.0	8.0	0.48	0	8	2.5	-10	140	FKM	201LG2SVG7	DM	14	14	2.0/24.0	2
	5.0	8.0	0.48	0	3	2	-10	140	FKM	201LG2SVG7A[1]	D5	8	9	2.0/24.0	2
	5.0	8.0	0.48	0	8	2.5	-10	140	FKM	201LG2SVG7A[1]	DM	14	14	2.0/24.0	2
3/8"	5.0	8.0	0.48	0	3	2	-10	180	FFKM	201LG3SKG7	D5	8	9	2.0/24.0	2
	5.0	8.0	0.48	0	8	2.5	-10	180	FFKM	201LG3SKG7A[1]	DM	14	14	2.0/24.0	2
	5.0	8.0	0.48	0	3	2	-10	140	FKM	201LG3SVG7	D5	8	9	2.0/24.0	2
	5.0	8.0	0.48	0	8	2.5	-10	140	FKM	201LG3SVG7	DM	14	14	2.0/24.0	2
	5.0	8.0	0.48	0	3	2	-10	140	FKM	201LG3SVG7A[1]	D5	8	9	2.0/24.0	2
	5.0	8.0	0.48	0	8	2.5	-10	140	FKM	201LG3SVG7A[1]	DM	14	14	2.0/24.0	2
	6.2	10.0	0.60	0	1.5	0.5	-10	180	FFKM	201LG3UKG7A[1]	D5	8	9	2.0/24.0	2
	6.2	10.0	0.60	0	4	1.5	-10	180	FFKM	201LG3UKG7A[1]	DM	14	14	2.0/24.0	2
	6.2	10.0	0.60	0	1.5	0.5	-10	140	FKM	201LG3UVG7	D5	8	9	2.0/24.0	2
	6.2	10.0	0.60	0	4	1.5	-10	140	FKM	201LG3UVG7	DM	14	14	2.0/24.0	2
	6.2	10.0	0.60	0	1.5	0.5	-10	140	FKM	201LG3UVG7A[1]	D5	8	9	2.0/24.0	2
	6.2	10.0	0.60	0	4	1.5	-10	140	FKM	201LG3UVG7A[1]	DM	14	14	2.0/24.0	2
1/2"	5.0	8.0	0.48	0	3	2	-10	180	FFKM	201LG4SKG7	D5	8	9	2.0/24.0	2
	5.0	8.0	0.48	0	8	2.5	-10	180	FFKM	201LG4SKG7A[1]	DM	14	14	2.0/24.0	2
	5.0	8.0	0.48	0	3	2	-10	140	FKM	201LG4SVG7	D5	8	9	2.0/24.0	2
	5.0	8.0	0.48	0	8	2.5	-10	140	FKM	201LG4SVG7	DM	14	14	2.0/24.0	2
	5.0	8.0	0.48	0	3	2	-10	140	FKM	201LG4SVG7A[1]	D5	8	9	2.0/24.0	2
	5.0	8.0	0.48	0	8	2.5	-10	140	FKM	201LG4SVG7A[1]	DM	14	14	2.0/24.0	2
	6.2	10.0	0.60	0	1.5	0.5	-10	180	FFKM	201LG4UKG7A[1]	D5	8	9	2.0/24.0	2
	6.2	10.0	0.60	0	4	1.5	-10	180	FFKM	201LG4UKG7A[1]	DM	14	14	2.0/24.0	2
	6.2	10.0	0.60	0	1.5	0.5	-10	140	FKM	201LG4UVG7	D5	8	9	2.0/24.0	2
	6.2	10.0	0.60	0	4	1.5	-10	140	FKM	201LG4UVG7	DM	14	14	2.0/24.0	2
	6.2	10.0	0.60	0	1.5	0.5	-10	140	FKM	201LG4UVG7A[1]	D5	8	9	2.0/24.0	2
	6.2	10.0	0.60	0	4	1.5	-10	140	FKM	201LG4UVG7A[1]	DM	14	14	2.0/24.0	2

Notes :
1. With silver shading ring
Nominal Pressure = 40 bar
All the references listed in this chart are NSF certified and use FDA compliant seals materials.

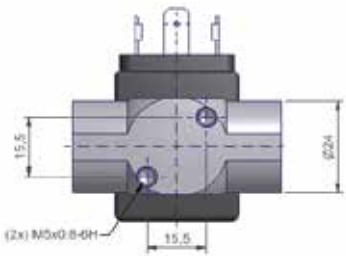

All dimensions are in mm

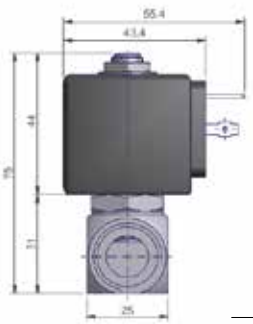

Dimensional Drawing N°2

	Port Size A	Orifice mm	kv L/min	MOPD bar	Fluid Temp. °C	Amb. Temp. °C
From	1/4" 3/8" 1/2"	1.5	1	2	-10	-10
To		6.2	10	20	140	50

2/2

202LG Series

High corrosion resistant valves

Direct Operated - Port size from 1/4" to 1/2"and orifice from 3.0mm to 6.2mm

316L Stainless St.

Pipe Mounting

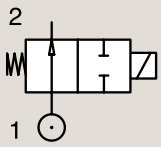

Normally Open

Port Size	Orifice Ø	Flow Factors		Operating Pressure Differential			Fluid Temperature		Seat Seal	Parker Valves		Power		Coil Group	Drawing N°
		Kv	KV	Min.	Max. (MOPD)		Min.	Max.				AC	DC		
BSP	mm	l/min	m³/h	Bar	AC bar	DC bar	°C	°C		Valve Ref.	Coil Ref.	W	W		
1/4"	3.0	4.5	0.27	0	6	6	-10	140	FKM	202LG2NVG7	D5	8	9	2.0/24.0	1
	5.0	8.0	0.48	0	3	3	-10	140	FKM	202LG2SVG7	D5	8	9	2.0/24.0	1
1/2"	5.0	8.0	0.48	0	3	3	-10	140	FKM	202LG4SVG7	D5	8	9	2.0/24.0	1
	6.2	10.0	0.60	0	1	1	-10	140	FKM	202LG4UVG7	D5	8	9	2.0/24.0	1

Notes :
Nominal Pressure = 40 bar
All the references listed in this chart are NSF certified and use FDA compliant seals materials.

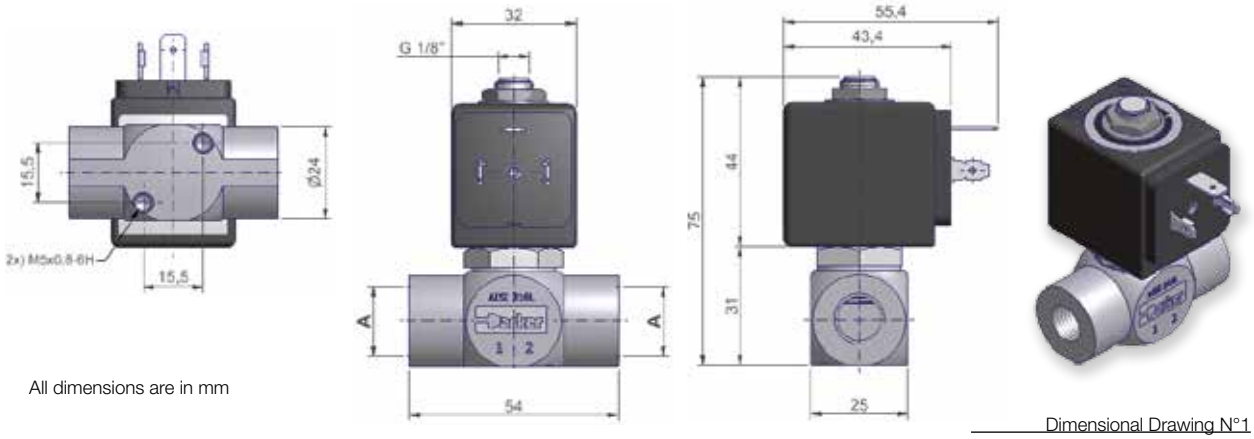

All dimensions are in mm

Dimensional Drawing N°1

	Port Size A	Orifice mm	kv L/min	MOPD bar	Fluid Temp. °C	Amb. Temp. °C
From	1/4"	3.0	4.5	1	-10	-10
To	1/2"	6.2	10	6	140	50

3/2

301LG Series

High corrosion resistant valves

Direct Operated - Port size from 1/8" to 1/4" and orifice from 1.5mm to 3.0mm

316L Stainless St.

Pipe Mounting

Normally Closed

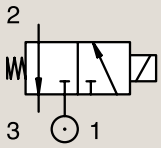

Port Size	Orifice Ø	Flow Factors		Operating Pressure Differential			Fluid Temperature		Seat Seal	Parker Valves		Power		Coil Group	Drawing N°
		Kv	KV	Min.	Max. (MOPD)		Min.	Max.				AC	DC		
BSP	mm	l/min	m³/h	Bar	AC bar	DC bar	°C	°C		Valve Ref.	Coil Ref.	W	W		
1/8"	1.5	1.0	0.06	0	8	8	-10	140	FKM	301LG1GVG2	DG	4	5	1.1/1.3	2
	2.5	2.3	0.14	0	3	3	-10	140	FKM	301LG1LVG2	DG	4	5	1.1/1.3	2
1/4"	1.5	1.0	0.06	0	8	8	-10	140	FKM	301LG2GVG2	DG	4	5	1.1/1.3	2
	1.5	1.0	0.06	0	12	12	-10	140	FKM	301LG2GVG7	D5	8	9	2.0/24.0	3
	2.5	2.3	0.14	0	3	3	-10	140	FKM	301LG2LVG2	DG	4	5	1.1/1.3	3
	3.0	4.5	0.27	0	4	4	-10	140	FKM	301LG2NVG7	D5	8	9	2.0/24.0	3

Notes :
Nominal Pressure = 40 bar
All the references listed in this chart are NSF certified and use FDA compliant seals materials.

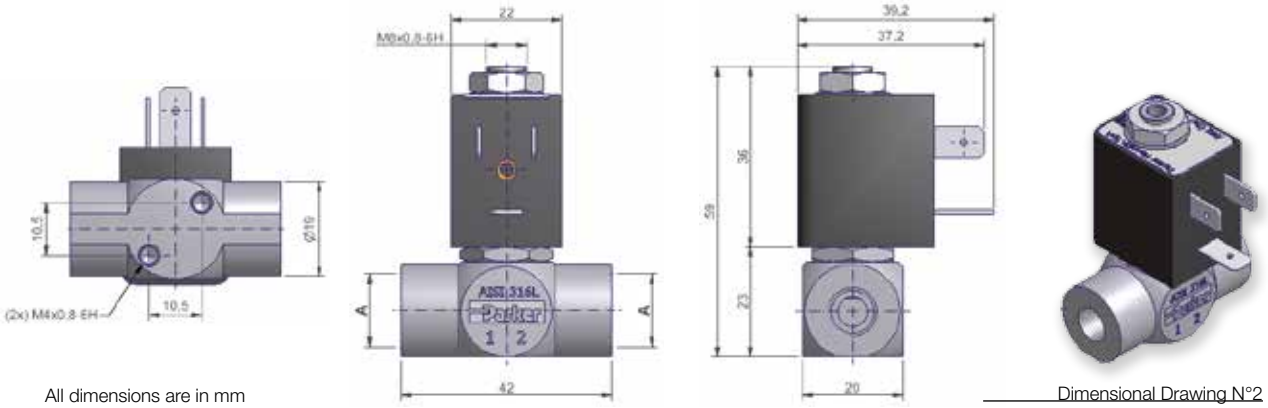

All dimensions are in mm

Dimensional Drawing N°2

	Port Size A	Orifice mm	kv L/min	MOPD bar	Fluid Temp. °C	Amb. Temp. °C
From	1/8"	1.5	1.0	3	-10	-10
To	1/4"	2.5	2.3	8	140	50

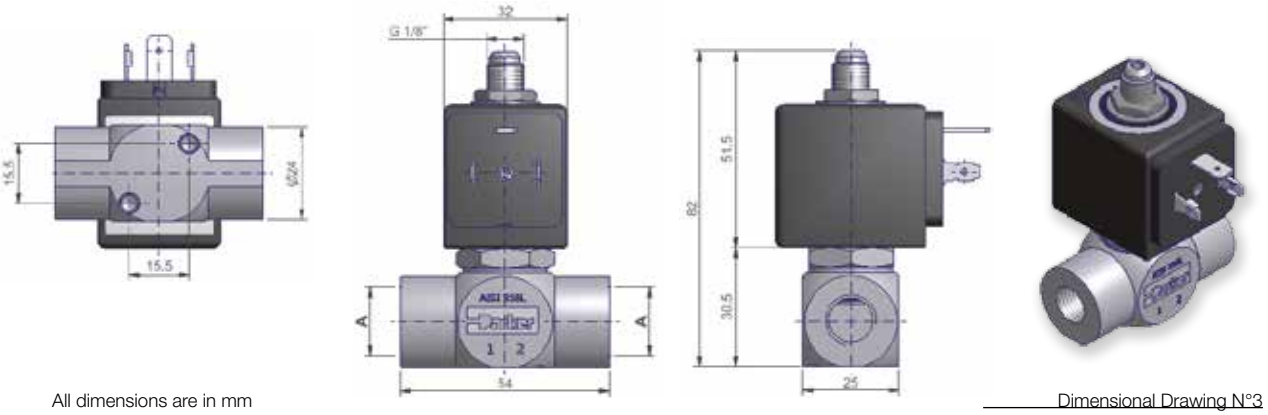

All dimensions are in mm

Dimensional Drawing N°3

	Port Size A	Orifice mm	kv L/min	MOPD bar	Fluid Temp. °C	Amb. Temp. °C
From	1/4"	1.5	1	4	-10	-10
To		3.0	4.5	12	140	50

121V / 122V / 133V / 131F Series

Product Description

This complete range with 2 ways and 3 ways constructions offers a large choice of sealing. These valves can be combined with a wide range of electrical parts including ATEX zone 0.

Applications

Market of interest:

- Life Sciences
- Food & Beverage Processing
- Commercial Equipment
- Industrial equipment
- Waste Water treatment

Typical applications:

- Water purification and preparation devices
- Dishwasher disinfectors, Laboratory and high end hot steam sterilizers
- Compatible aggressive liquids shut-off
- Ammonia (with silver shading ring version in option)

Benefits

The most valuable features you will find in this product range:

- FFKM seal option for superior endurance in heavy duty conditions
- Modular concept: a wide range of electrical parts can be used with this family, including ATEX, low power, IP67, UL/VDE approved
- Robust and solid design
- Large choice of sealing
- Selection for ATEX zone 0 applications
- Universal 3 ways construction available

General Description

Materials in contact with the fluid

Valve Body & Seat:
AISI 303 Stainless Steel (316L for U133V)

Plunger:
Ferritic stainless steel

Shading ring:
Copper: standard
Silver: according to notes

Other parts:
Stainless steel

Seals (according versions):
FKM, PTFE, RUBY, PUR

Installation

The valves can be mounted in any position. It is however recommended to install them with the coil in vertical position above the body. Please check compability with materials.

Media

These valves have been developed to achieve the best performances with a wide range of media. Check compatibility with material.

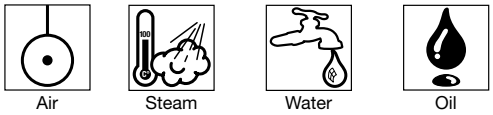

Temperature

For the 121V: The ambient temperature range of the valve is -10°C to +50°C.

For the 121V5x97 and 131V5x97 series: The ambient temperature range of the valve is -20°C to +65°C.

For the U133Vx97: The ambient temperature range of the valve is -25°C to +50°C.

For ATEX environments: temperature can be limited by the max ambient temperature of the coil. See coil pages.

Coils

A wide range of coils can be used with this range.
The complete coil range is described in pages 45 to 69.

How to Order

A complete solenoid valve is composed by 3 elements: the **valve body**, the **housing** and the **coil**.

Step 1: Select the valve body reference needed. **Example: 121V5706**

Step 2: Select the housing depending on the protection level. **Example: 2995**

Step 3: Select the coil ref. + voltage code. Find the voltage code in coil pages starting from page 45 **Example: 481865C2**

Step 5: The complete assembly numbering system is **: 121V5706-2995-481865C2**

Step 4: Accessories

Din Plug Connector according to DIN EN 175301-803 Form A **48658640** (batch size = 25)

121V Series

High corrosion resistant valves

Direct Operated - Port size 1/4" and orifice from 1.5mm to 5.0mm

303 Stainless St.

Pipe Mounting

Normally Closed

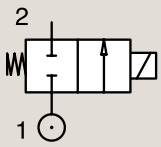

Port Size	Orifice Ø	Flow Factors		Operating Pressure Differential			Fluid Temperature		Seat Seal	Parker Valves			IS	ATEX Zone	Protection Mode	Power		Coil Group	Dwg N°
		Kv	KV	Min.	Max. (MOPD)		Min.	Max.		Valve Ref.	Housing Ref.	Coil Ref.				AC	DC		
	mm	l/min	m³/h	Bar	AC bar	DC bar	°C	°C								W	W		
	1.5	1.5	0.09	0	20	20	-10	100	FKM	121V5406[1]	2995	481865	-	-	-	8	9	2.0	8116
	1.5	1.5	0.09	0	20	20	-10	120	FKM	121V5406[1]	4270	481000	-	-	-	8	8	2.0	8116
	1.5	1.5	0.09	0	60	25	0	100	Ruby	121V5463[12]	2995	481865	-	-	-	8	9	2.0	8116
	1.5	1.5	0.09	0	75	30	0	130	Ruby	121V5463[12]	4270	481000	-	-	-	8	8	2.0	8116
	1.5	1.5	0.09	0	100	55	0	140	Ruby	121V5463[12]	4270	486265	-	-	-	14	14	2.0	8116
	1.5	1.5	0.09	0	-	8	-20	75	PUR	121V5497[13]	2995	482740	-	-	-	-	1.6	6.0/8.0	8116
	1.5	1.5	0.09	0	-	8	-20	65	PUR	121V5497[13]	2995	496125	-	2-22	Ex nAc nCc IIC T5/T6	-	1.6	6.0/8.0	8116
	1.5	1.5	0.09	0	10	10	-20	75	PUR	121V5497[13]	-	495900	-	1-21	Ex db mb IIC T4 to T6	3	2	6.0/8.0	8024
	1.5	1.5	0.09	0	-	10	-20	75	PUR	121V5497[13]	-	495910	√	0-20	Ex ia IIC T4 to T6	-	0.3-1.2	6.0/8.0	8024
	2.5	3.5	0.21	0	14	7	-10	100	FKM	121V5706[1]	2995	481865	-	-	-	8	9	2.0	8116
	2.5	3.5	0.21	0	14	9	-10	120	FKM	121V5706[1]	4270	481000	-	-	-	8	8	2.0	8116
	2.5	3.5	0.21	0	14	14	-10	120	FKM	121V5706[1]	4270	486265	-	-	-	14	14	2.0	8116
	2.5	3.5	0.21	0	28	10	0	100	Ruby	121V5763[12]	2995	481865	-	-	-	8	9	2.0	8116
	2.5	3.5	0.21	0	34	12	0	130	Ruby	121V5763[12]	4270	481000	-	-	-	8	8	2.0	8116
	2.5	3.5	0.21	0	50	22	0	140	Ruby	121V5763[12]	4270	486265	-	-	-	14	14	2.0	8116
	3.0	4.5	0.27	0	10	7	-10	100	FKM	121V5306[1]	2995	481865	-	-	-	8	9	2.0	8116
	3.0	4.5	0.27	0	10	8.5	-10	120	FKM	121V5306[1]	4270	481000	-	-	-	8	8	2.0	8116
	3.0	4.5	0.27	0	10	10	-10	120	FKM	121V5306[1]	4270	486265	-	-	-	14	14	2.0	8116
	3.0	4.5	0.27	0	20	7	0	100	Ruby	121V5363[12]	2995	481865	-	-	-	8	9	2.0	8116
	3.0	4.5	0.27	0	25	8.5	0	130	Ruby	121V5363[12]	4270	481000	-	-	-	8	8	2.0	8116
	3.0	4.5	0.27	0	36	15	0	140	Ruby	121V5363[12]	4270	486265	-	-	-	14	14	2.0	8116
1/4"	3.0	3.5	0.21	0	-	2	-20	75	PUR	121V5397[13]	2995	482740	-	-	-	-	1.6	6.0/8.0	8116
	3.0	3.5	0.21	0	-	2	-20	65	PUR	121V5397[13]	2995	496125	-	2-22	Ex nAc nCc IIC T5/T6	-	1.6	6.0/8.0	8116
	3.0	3.5	0.21	0	4.5	4	-20	75	PUR	121V5397[13]	-	495900	-	1-21	Ex db mb IIC T4 to T6	3	2	6.0/8.0	8024
	3.0	3.5	0.21	0	-	4.5	-20	75	PUR	121V5397[13]	-	495910	√	0-20	Ex ia IIC T4 to T6	-	0.3-1.2	6.0/8.0	8024
	4.0	7.0	0.42	0	10	4	-10	100	FKM	121V5206[1]	2995	481865	-	-	-	8	9	2.0	8116
	4.0	7.0	0.42	0	10	5	-10	120	FKM	121V5206[1]	4270	481000	-	-	-	8	8	2.0	8116
	4.0	7.0	0.42	0	10	10	-10	120	FKM	121V5206[1]	4270	486265	-	-	-	14	14	2.0	8116
	4.0	7.0	0.42	0	3.5	3.5	0	100	PTFE	121V5212[12]	2995	481865	-	-	-	8	9	2.0	8116
	4.0	7.0	0.42	0	3.5	3.5	0	130	PTFE	121V5212[12]	4270	481000	-	-	-	8	8	2.0	8116
	4.0	7.0	0.42	0	3.5	3.5	0	130	PTFE	121V5212[12]	4270	486265	-	-	-	14	14	2.0	8116
	4.0	7.0	0.42	0	12	4	0	100	Ruby	121V5263[12]	2995	481865	-	-	-	8	9	2.0	8116
	4.0	7.0	0.42	0	15	5	0	130	Ruby	121V5263[12]	4270	481000	-	-	-	8	8	2.0	8116
	4.0	7.0	0.42	0	22	10	0	180	Ruby	121V5263[12]	4270	486265	-	-	-	14	14	2.0	8116
	5.0	10.0	0.60	0	7	2	-10	100	FKM	121V5106[1]	2995	481865	-	-	-	8	9	2.0	8116
	5.0	10.0	0.60	0	7	2.8	-10	120	FKM	121V5106[1]	4270	481000	-	-	-	8	8	2.0	8116
	5.0	10.0	0.60	0	7	5	-10	120	FKM	121V5106[1]	4270	486265	-	-	-	14	14	2.0	8116
	5.0	10.0	0.60	0	2.8	2	0	100	PTFE	121V5112[12]	2995	481865	-	-	-	8	9	2.0	8116
	5.0	10.0	0.60	0	2.8	2.8	0	130	PTFE	121V5112[12]	4270	481000	-	-	-	8	8	2.0	8116
	5.0	10.0	0.60	0	2.8	2.8	0	130	PTFE	121V5112[12]	4270	486265	-	-	-	14	14	2.0	8116
	5.0	10.0	0.60	0	8.5	2	0	100	Ruby	121V5163[12]	2995	481865	-	-	-	8	9	2.0	8116
	5.0	10.0	0.60	0	10	3.5	0	130	Ruby	121V5163[12]	4270	481000	-	-	-	8	8	2.0	8116
	5.0	10.0	0.60	0	14	6.5	0	140	Ruby	121V5163[12]	4270	486265	-	-	-	14	14	2.0	8116

Notes :
1. With silver shading ring
2. Valve only compatible with hydraulic oil and neutral liquids
3. For water, the maximum fluid temperature is +40°C

The maximum fluid temperature is given for the lower coil class temperature. See coil pages for more details.

121V Series

High corrosion resistant valves

Direct Operated - Port size 1/4" and orifice from 1.0mm to 5.0mm

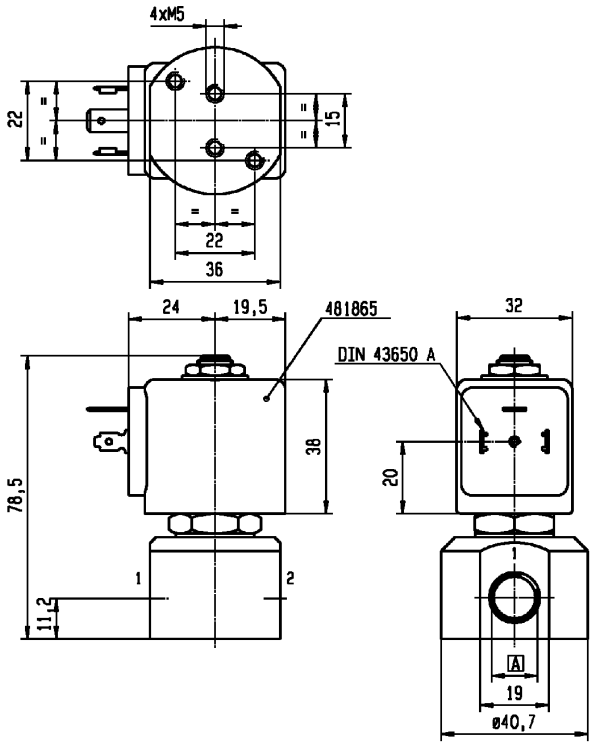

A	G 1/8"
	G 1/4"

Drawing 8116

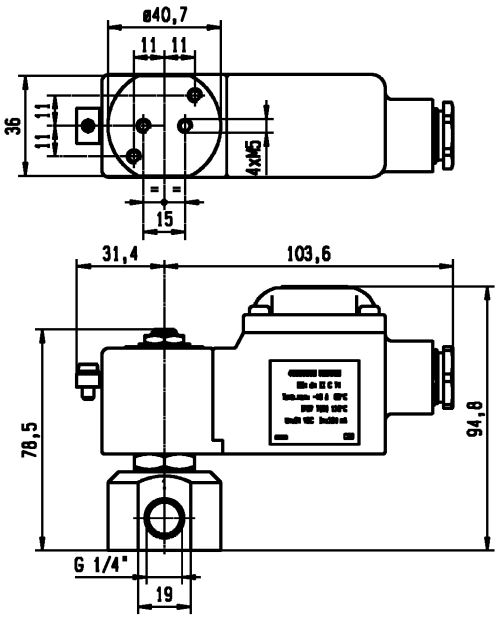

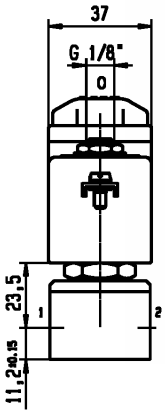

Drawing 8024

2/2

122V Series

High corrosion resistant valves

Direct Operated - Port size 1/4" and orifice 2.5 mm

SIL

303 Stainless St.

Pipe Mounting

Normally Open

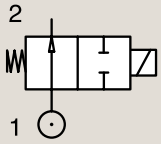

Port Size	Orifice Ø	Flow Factors		Operating Pressure Differential			Fluid Temperature		Seat Seal	Parker Valves			IS	ATEX Zone	Protection Mode	Power		Coil Group	Dwg N°
		Kv	KV	Min.	Max. (MOPD)		Min.	Max.								AC	DC		
	mm	l/min	m³/h	Bar	AC bar	DC bar	°C	°C		Valve Ref.	Housing Ref.	Coil Ref.				W	W		
1/4"	2.5	3.0	0.18	0	12	12	-30	100	FKM	122V8306	2995	481865	-	-	-	8	9	2.1	8116
	2.5	3.0	0.18	0	12	12	-30	120	FKM	122V8306	4270	481000	-	-	-	8	8	2.1	8116

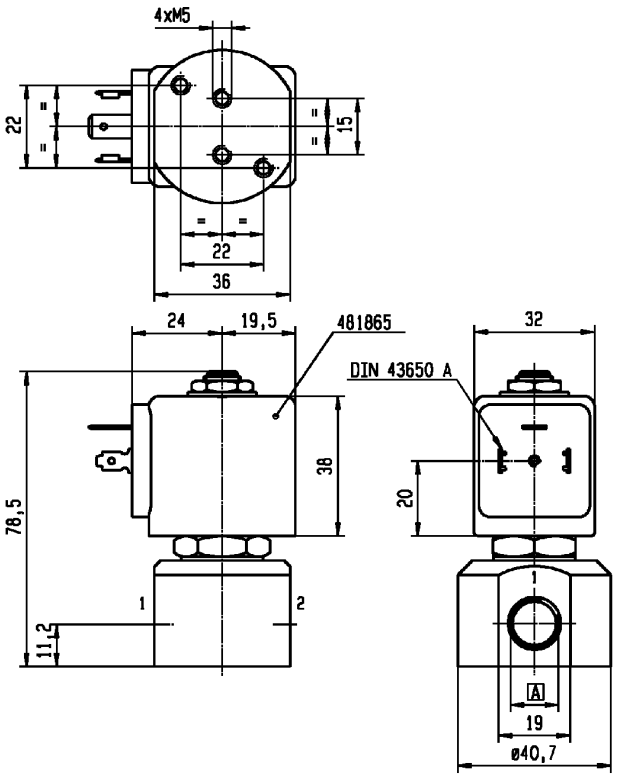

A	G 1/8"
	G 1/4"

Drawing 8116

131V Series

High corrosion resistant valves

Direct Operated - Port size 1/4" and orifice from1.0mm to 2.5mm

303 Stainless St.

Pipe Mounting

Normally Closed

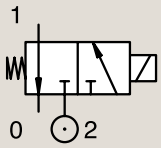

Port Size	Orifice Ø	Flow Factors		Operating Pressure Differential			Fluid Temperature		Seat Seal	Parker Valves			IS	ATEX Zone	Protection Mode	Power		Coil Group	Dwg N°
		Kv	KV	Min.	Max. (MOPD)		Min.	Max.		Valve Ref.	Housing Ref.	Coil Ref.				AC	DC		
	mm	l/min	m³/h	Bar	AC bar	DC bar	°C	°C								W	W		
1/4"	1.0	0.6	0.04	0	-	10	-10	55	FKM	131V5490$_{3}$	2995	48358001	√	0-20	Ex ia IIC T6	-	0.5-3	6.0/7.0/8.0	6740
	1.0	0.6	0.04	0	-	10	-10	75	FKM	131V5490$_{3}$	-	495910	√	0-20	Ex ia IIC T4 to T6	-	0.3-1.2	6.0/7.0/8.0	8024
	1.5	1.5	0.09	0	15	15	-10	100	FKM	131V5406$_{1}$	2995	481865	-	-	-	8	9	2.1	6740
	1.5	1.5	0.09	0	15	15	-10	120	FKM	131V5406$_{1}$	4270	481000	-	-	-	8	8	2.1	6740
	1.5	1.5	0.09	0	15	15	0	100	Ruby	131V5463$_{12}$	2995	481865	-	-	-	8	9	2.0	6740
	1.5	1.5	0.09	0	15	15	0	130	Ruby	131V5463$_{12}$	4270	481000	-	-	-	8	8	2.0	6740
	1.5	1.5	0.09	0	15	15	0	180	Ruby	131V5463$_{12}$	4270	486265	-	-	-	14	14	2.0	6740
	1.5	1.5	0.09	0	-	7	-20	75	PUR	131V5497$_{1}$	2995	482740	-	-	-	-	1.6	6.0/8.0	6740
	1.5	1.5	0.09	0	-	7	-20	65	PUR	131V5497$_{1}$	2995	496125	-	2-22	Ex nAc nCc IIC T5/T6	-	1.6	6.0/8.0	6740
	1.5	1.5	0.09	0	7	7	-20	75	PUR	131V5497$_{1}$	-	495900	-	1-21	Ex db mb IIC T4 to T6	3	2	6.0/8.0	8024
	1.5	1.5	0.09	0	-	7	-20	75	PUR	131V5497$_{1}$	-	495910	√	0-20	Ex ia IIC T4 to T6	-	0.3-1.2	6.0/8.0	8024
	2.5	3.5	0.21	0	7	7	-10	120	FKM	131V5306$_{1}$	2995	481865	-	-	-	8	9	2.0/2.1	6740
	2.5	3.5	0.21	0	7	7	-10	120	FKM	131V5306$_{1}$	4270	481000	-	-	-	8	8	2.1	6740
	2.5	3.5	0.21	0	7	7	-30	100	Ruby	131V5363$_{12}$	2995	481865	-	-	-	8	9	2.0	6740
	2.5	3.5	0.21	0	7	7	-30	130	Ruby	131V5363$_{12}$	4270	481000	-	-	-	8	8	2.0	6740
	2.5	3.5	0.21	0	7	7	-30	180	Ruby	131V5363$_{12}$	4270	486265	-	-	-	14	14	2.0	6740
	2.5	3.0	0.18	0	-	2	-20	75	PUR	131V5397$_{1}$	2995	482740	-	-	-	-	1.6	6.0/8.0	6740
	2.5	3.0	0.18	0	-	2	-20	65	PUR	131V5397$_{1}$	2995	496125	-	2-22	Ex nAc nCc IIC T5/T6	-	1.6	6.0/8.0	6740
	2.5	3.0	0.18	0	2	2	-20	75	PUR	131V5397$_{1}$	-	495900	-	1-21	Ex db mb IIC T4 to T6	3	2	6.0/8.0	8024
	2.5	3.0	0.18	0	-	2	-20	75	PUR	131V5397$_{1}$	-	495910	√	0-20	Ex ia IIC T4 to T6	-	0.3-1.2	6.0/8.0	8024

Notes :
1. With silver shading ring
2. Valve only compatible with hydraulic oil and neutral liquids
3. No shading ring for this version

In this grid the maximum fluid temperature is given for the lower coil class temperature. See coil pages for more details.

Drawing 6740

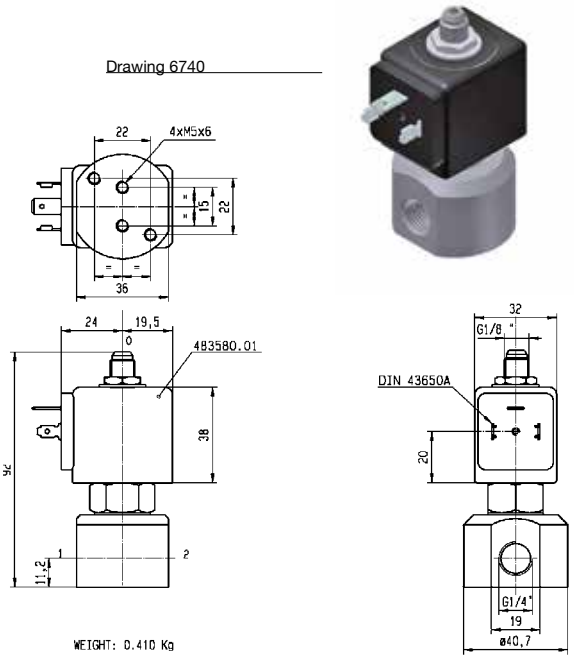

Drawing 8024

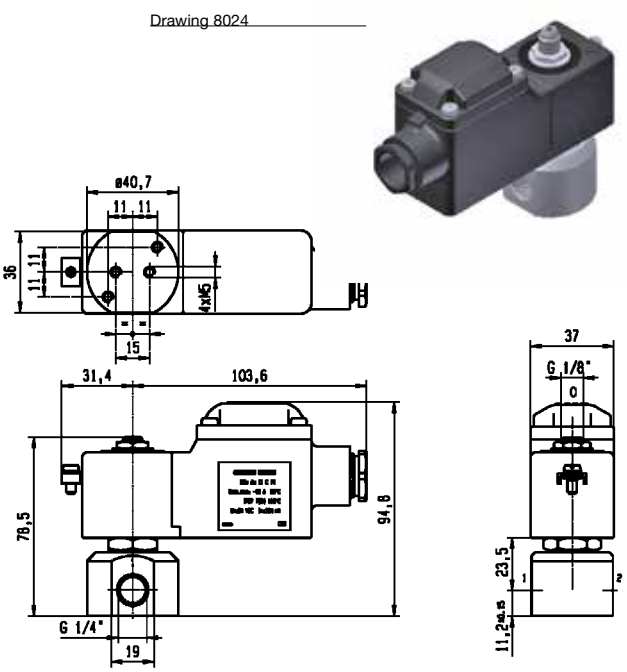

131F Series

High corrosion resistant valves

Direct Operated - Sub-base mounting and orifice from 1.5mm to 2.5mm

316L Stainless St.

Sub-base Mounting

Normally Closed

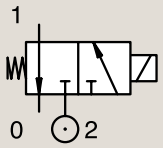

Port Size	Orifice Ø	Flow Factors		Operating Pressure Differential			Fluid Temperature		Seat Seal	Parker Valves			IS	ATEX Zone	Protection Mode	Power		Coil Group	Dwg N°
		Kv	KV	Min.	Max. (MOPD)		Min.	Max.								AC	DC		
	mm	l/min	m³/h	Bar	AC bar	DC bar	°C	°C		Valve Ref.	Housing Ref.	Coil Ref.				W	W		
SB	1.5	1.5	0.09	0	15	15	-10	100	FKM	131F5406	2995	481865	-	-	-	8	9	2.1	3509

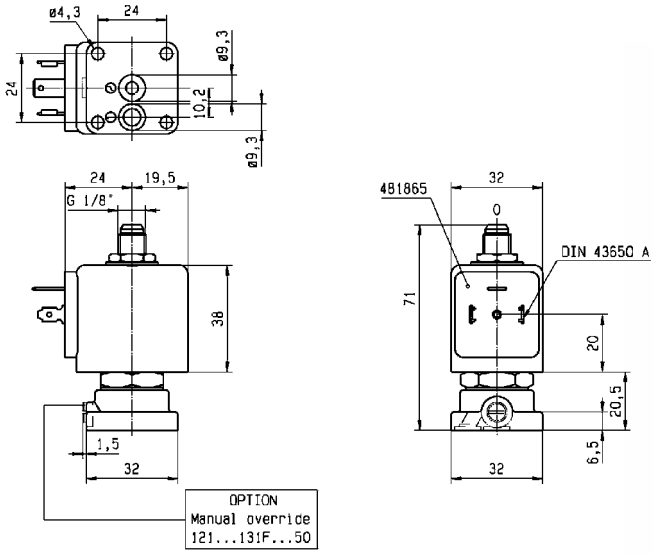

Drawing 3509

316L Stainless St.

Sub-base Mounting

Normally Closed

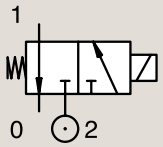

Port Size	Orifice Ø	Flow Factors		Operating Pressure Differential			Fluid Temperature		Seat Seal	Parker Valves			IS	ATEX Zone	Protection Mode	Power		Coil Group	Dwg N°
		Kv	KV	Min.	Max. (MOPD)		Min.	Max.								AC	DC		
	mm	l/min	m³/h	Bar	AC bar	DC bar	°C	°C		Valve Ref.	Housing Ref.	Coil Ref.				W	W		
SB	2.5	3.5	0.21	0	10	10	-25	65	FKM	U131F5295[1]	-	496560	-	1-21	Ex db mb IIC T4	8	8	9.0/10.1/10.2	8174

Notes :

1. No shading ring for this version

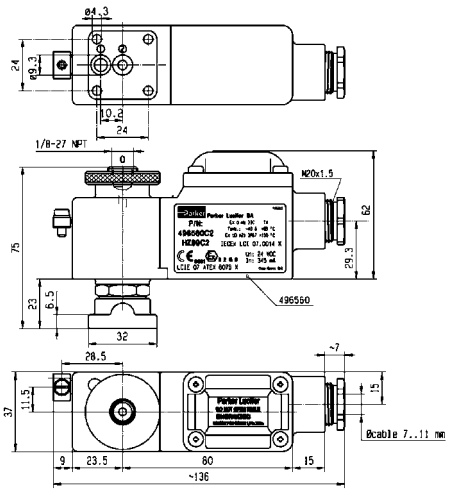

Drawing 8174

133V Series

High corrosion resistant valves

Direct Operated - Port size 1/4" and orifice from 1.5mm to 2.5mm

303 Stainless St.

Pipe Mounting

Universal

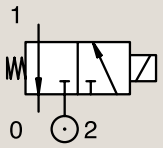

Port Size	Orifice Ø	Flow Factors		Operating Pressure Differential			Fluid Temperature		Seat Seal	Parker Valves			IS	ATEX Zone	Protection Mode	Power		Coil Group	Dwg N°
		Kv	KV	Min.	Max. (MOPD)		Min.	Max.								AC	DC		
	mm	l/min	m³/h	Bar	AC bar	DC bar	°C	°C		Valve Ref.	Housing Ref.	Coil Ref.				W	W		
1/4"	1.5	1.5	0.09	0	10	10	-10	100	FKM	133V5406$_{1}$	2995	481865	-	-	-	8	9	2.1	6740
	1.5	1.5	0.09	0	10	10	-10	120	FKM	133V5406$_{1}$	4270	481000	-	-	-	8	8	2.1	6740
	1.5	1.5	0.09	0	4	4	0	100	Ruby	133V5463$_{12}$	2995	481865	-	-	-	8	9	2.0	6740
	1.5	1.5	0.09	0	10	10	0	130	Ruby	133V5463$_{12}$	4270	481000	-	-	-	8	8	2.0	6740
	1.5	1.5	0.09	0	10	10	0	180	Ruby	133V5463$_{12}$	4270	486265	-	-	-	14	14	2.0	6710
	2.5	3.5	0.21	0	4	4	-10	100	FKM	133V5306$_{1}$	2995	481865	-	-	-	8	9	2.1	6740
	2.5	3.5	0.21	0	4	4	-10	120	FKM	133V5306$_{1}$	4270	481000	-	-	-	8	8	2.1	6740
	2.5	3.5	0.21	0	4	4	0	100	Ruby	133V5363$_{12}$	2995	481865	-	-	-	8	9	2.0	6740
	2.5	3.5	0.21	0	4	4	0	130	Ruby	133V5363$_{12}$	4270	481000	-	-	-	8	8	2.0	6740
	2.5	3.5	0.21	0	4	4	0	180	Ruby	133V5363$_{12}$	4270	486265	-	-	-	14	14	2.0	6740

Notes :
1. With silver shading ring
2. Valve only compatible with hydraulic oil and neutral liquids

316L Stainless St.

Pipe Mounting

Universal

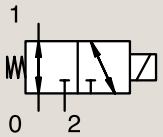

Port Size	Orifice Ø	Flow Factors		Operating Pressure Differential			Fluid Temperature		Seat Seal	Parker Valves			IS	ATEX Zone	Protection Mode	Power		Coil Group	Dwg N°
		Kv	KV	Min.	Max. (MOPD)		Min.	Max.								AC	DC		
	mm	l/min	m³/h	Bar	AC bar	DC bar	°C	°C		Valve Ref.	Housing Ref.	Coil Ref.				W	W		
	2.5	3.5	0.21	0	8.5	8.5	-25	75	FKM	U133V7695	-	492310	-	1-21	Ex eb mb IIC T4/T5	6	6	9.0/10.1	8166
1/4"	2.5	3.5	0.21	0	-	8.5	-25	65	FKM	U133V7695	-	49296501	√	0-20	Ex ia IIC T6	-	0.3-2.3	9.0/10.1	8166
	2.5	3.5	0.21	0	-	8.5	-25	65	FKM	U133V7695	-	496565	√	0-20	Ex ia IIC T4 to T6	-	0.8-2.6	9.0/10.1	8166

Notes :
The maximum fluid temperature of this reference is given for the lower class temperature . See coil pages for more details.

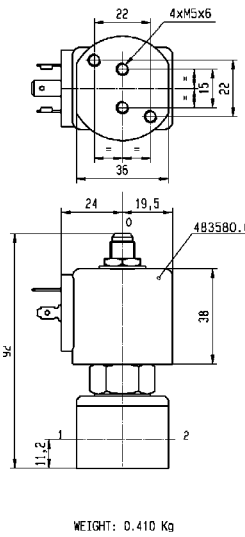

Drawing 6740

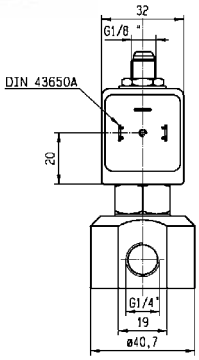

Drawing 8166

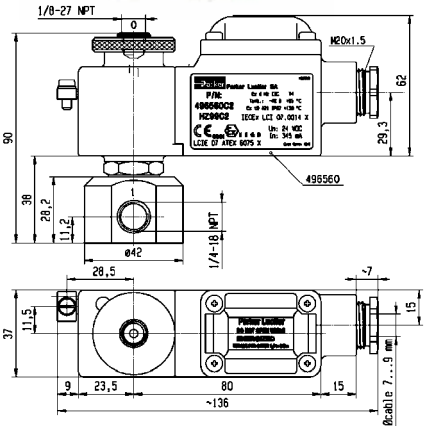

221G Series

Product Description

These 2 ways valves with 316L stainless steel body and FKM sealing offer a large possibility of applications based on a wide chemical compatibility with many fluids and environments.

This range from orifice 15mm to 25mm is suitable for pressure from 0 to 16 bar and can be associated with ATEX coils.

Applications

Market of interest:

- Industrial equipment
- Life Sciences
- Food & Beverage Processing
- Commercial Equipment
- Wastewater treatment

Typical applications:

- Food & Beverage processing
- Dishwasher disinfectors, sterilizers
- Aggressive liquids & environments

Benefits

The 221G anti-corrosive solenoid valve is the most resistant solution for fluid control in even the harshest environment

This stainless steel solenoid valves is the most resistant to corrosion and aggressive chemicals with the largest number of possible electrical connections. It delivers high performance and reliability:

- Longer lifetime (+30% in average)
- Cost efficient (-10% in cost installation)
- Compatible with explosive environment (ATEX certified)

General Description

Materials in contact with fluid

Valve Body, seat, cover & diaphragm holder:

AISI 316L Stainless Steel

Shading ring:

None in standard

Silver for all codes type 221G6x06

Plunger :

Ferritic Stainless Steel

Other parts:

Stainless Steel

CuBe2 for all codes type 221G6x36

Seals:

FKM

Installation

The valves can be mounted in any position. It is however recommended to install them with the coil in vertical position above the body.

Media

These valves have been developed to achieve a wide range of chemical compatibilities with 316L body material and FKM sealing . Check chemical compatibilities with the fluid.


Air


Water


Oil

Temperature

The ambient temperature range of the valve is -10°C to +50°C.
For ATEX environments, temperature can be limited by the max ambient temperature of the coil. See coil pages.

Coils

A wide range of coils can be used with this range.

The complete coil range is described in pages 45 to 69.

How to Order

A complete solenoid valve is composed by 3 elements: the **valve body**, the **housing** and the **coil**.

Step 1: Select the valve body reference needed. **Example: 221G6306**

Step 2: Select the housing depending on the protection level. **Example: 2995**

Step 3: Select the coil ref. + voltage code. Find the voltage code in coil pages starting from page 44 **Example: 481865C2**

Step 5: The complete assembly numbering system is **: 221G6306-2995-481865C2**

Step 4: Accessories
Din Plug Connector according to DIN EN 175301-803 Form A **48658640** (batch size = 25)

Please note: Valve can be ordered according to desired configuration: Valve body and coil separately, Valve body and coil assembled or Valve body, pipe mounting adaptation kit and coil assembled (pipe mounting version)

221G Series

Valves for dry or lubricated air, neutral gases and liquids

Magnalift - Port size from 3/8" to 1/2" and orifice 15mm

316L Stainless St.

Pipe Mounting

Normally Closed

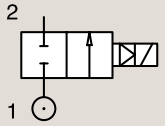

Port Size	Orifice Ø	Flow Factors		Operating Pressure Differential			Fluid Temperature		Seat Seal	Parker Valves			IS	ATEX Zone	Protection Mode	Power		Coil Group	Dwg N°
		Kv	KV	Min.	Max. (MOPD)		Min.	Max.								AC	DC		
	mm	l/min	m³/h	Bar	AC bar	DC bar	°C	°C		Valve Ref.	Housing Ref.	Coil Ref.				W	W		
	15	65	3.90	0	16	-	0	100	FKM	221G6306$_{1}$	2995	481865	-	-	-	8	-	2.0	3732
	15	65	3.90	0	-	6	0	60	FKM	221G6306$_{12}$	2995	492425	-	-	-	-	14	2.0	3732
	15	65	3.90	0	16	-	0	65	FKM	221G6306$_{1}$	2995	495870	-	2-22	Ex nAc nCc IIC T3/T4	8	-	2.0	3732
	15	65	3.90	0	16	-	0	120	FKM	221G6306$_{1}$	4538	481000	-	-	-	8	-	2.0	3732
	15	65	3.90	0	20	7	0	140	FKM	221G6306$_{1}$	4538	486265	-	-	-	14	14	2.0	3732
3/8"	15	65	3.90	0	16	-	0	80	FKM	221G6306$_{1}$	-	495905	-	1-21	Ex db mb IIC T4	8	-	2.0	3732
	15	65	3.90	0	-	10	-10	100	FKM	221G6336	2995	481865	-	-	-	-	9	2.1	3732
	15	65	3.90	0	-	10	-10	65	FKM	221G6336	2995	495870	-	2-22	Ex nAc nCc IIC T3/T4	-	9	2.1	3732
	15	65	3.90	0	10	10	-10	65	FKM	221G6336	-	492070	-	1-21	Ex mb IIC T4/T5	9	8	2.1	3732
	15	65	3.90	0	10	10	-10	75	FKM	221G6336	-	492190	-	1-21	Ex eb mb IIC T3/T4	11	9	2.1	3732
	15	65	3.90	0	-	10	-10	80	FKM	221G6336	-	495905	-	1-21	Ex db mb IIC T4	-	8	2.1	3732
	15	65	3.90	0	16	-	0	100	FKM	221G6506$_{1}$	2995	481865	-	-	-	8	-	2.0	3732
	15	65	3.90	0	-	6	0	60	FKM	221G6506$_{12}$	2995	492425	-	-	-	-	14	2.0	3732
	15	65	3.90	0	16	-	0	65	FKM	221G6506$_{1}$	2995	495870	-	2-22	Ex nAc nCc IIC T3/T4	8	-	2.0	3732
	15	65	3.90	0	16	-	0	120	FKM	221G6506$_{1}$	4538	481000	-	-	-	8	-	2.0	3732
	15	65	3.90	0	20	7	0	140	FKM	221G6506$_{1}$	4538	486265	-	-	-	14	14	2.0	3732
1/2"	15	65	3.90	0	16	-	0	80	FKM	221G6506$_{1}$	-	495905	-	1-21	Ex db mb IIC T4	8	-	2.0	3732
	15	65	3.90	0	-	10	-10	100	FKM	221G6536	2995	481865	-	-	-	-	9	2.1	3732
	15	65	3.90	0	-	10	-10	65	FKM	221G6536	2995	495870	-	2-22	Ex nAc nCc IIC T3/T4	-	9	2.1	3732
	15	65	3.90	0	10	10	-10	65	FKM	221G6536	-	492070	-	1-21	Ex mb IIC T4/T5	9	8	2.1	3732
	15	65	3.90	0	10	10	-10	75	FKM	221G6536	-	492190	-	1-21	Ex eb mb IIC T3/T4	11	9	2.1	3732
	15	65	3.90	0	-	10	-10	80	FKM	221G6536	-	495905	-	1-21	Ex db mb IIC T4	-	8	2.1	3732

Notes:
1. With silver shading ring
2. For air, the ambient temperature is limited to +25°C, and the max fluid temperature to +40°C
The maximum fluid temperature is given for the lower coil class temperature. See coil pages for more details.

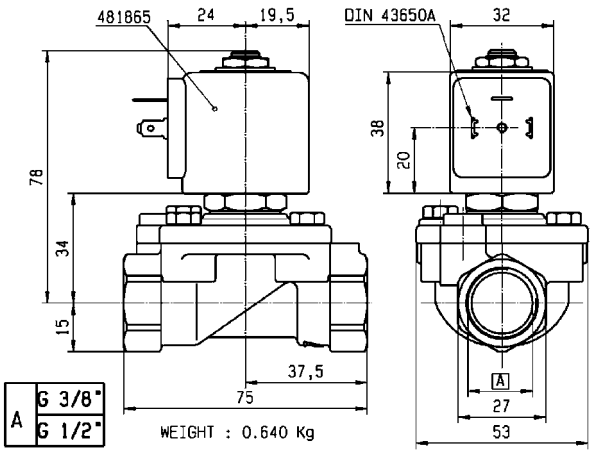

Drawing 3732

221G Series

Valves for dry or lubricated air, neutral gases and liquids

Magnalift - Port size from 3/4" to 1" and orifice from 15.0mm to 25mm

316L Stainless St.

Pipe Mounting

Normally Closed

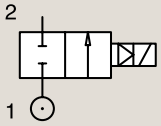

Port Size	Orifice Ø	Flow Factors		Operating Pressure Differential			Fluid Temperature		Seat Seal	Parker Valves			IS	ATEX Zone	Protection Mode	Power		Coil Group	Dwg N°
		Kv	KV	Min.	Max. (MOPD)		Min.	Max.								AC	DC		
	mm	l/min	m³/h	Bar	AC bar	DC bar	°C	°C		Valve Ref.	Housing Ref.	Coil Ref.				W	W		
	15	80	4.80	0	16	-	0	100	FKM	221G6606[1]	2995	481865	-	-	-	8	-	2.0	8451
	15	80	4.80	0	-	6	0	60	FKM	221G6606[12]	2995	492425	-	-	-	-	14	2.0	8451
	15	80	4.80	0	16	-	0	65	FKM	221G6606[1]	2995	495870	-	2-22	Ex nAc nCc IIC T3/T4	8	-	2.0	8451
	15	80	4.80	0	16	-	0	120	FKM	221G6606[1]	4538	481000	-	-	-	8	-	2.0	8451
	15	80	4.80	0	20	7	0	140	FKM	221G6606[1]	4538	486265	-	-	-	14	14	2.0	8451
3/4"	15	80	4.80	0	16	-	0	80	FKM	221G6606[1]	-	495905	-	1-21	Ex db mb IIC T4	8	-	2.0	8451
	15	80	4.80	0	-	10	-10	100	FKM	221G6636	2995	481865	-	-	-	-	9	2.1	8451
	15	80	4.80	0	-	10	-10	65	FKM	221G6636	2995	495870	-	2-22	Ex nAc nCc IIC T3/T4	-	9	2.1	8451
	15	80	4.80	0	10	10	-10	65	FKM	221G6636	-	492070	-	1-21	Ex mb IIC T4/T5	9	8	2.1	8451
	15	80	4.80	0	10	10	-10	75	FKM	221G6636	-	492190	-	1-21	Ex eb mb IIC T3/T4	11	9	2.1	8451
	15	80	4.80	0	-	10	-10	80	FKM	221G6636	-	495905	-	1-21	Ex db mb IIC T4	-	8	2.1	8451
	25	160	9.60	0	16	-	0	100	FKM	221G6106[1]	2995	481865	-	-	-	8	-	2.0	3448
	25	160	9.60	0	-	6	0	60	FKM	221G6106[12]	2995	492425	-	-	-	-	14	2.0	3448
	25	160	9.60	0	16	-	0	65	FKM	221G6106[1]	2995	495870	-	2-22	Ex nAc nCc IIC T3/T4	8	-	2.0	3448
	25	160	9.60	0	16	6	0	120	FKM	221G6106[1]	4538	486265	-	-	-	14	14	2.0	3448
1"	25	160	9.60	0	16	-	0	80	FKM	221G6106[1]	-	495905	-	1-21	Ex db mb IIC T4	8	-	2.0	3448
	25	170	10.20	0	-	10	-10	100	FKM	221G6136	2995	481865	-	-	-	-	9	2.0	3448
	25	170	10.20	0	-	10	-10	65	FKM	221G6136	2995	495870	-	2-22	Ex nAc nCc IIC T3/T4	-	9	2.0	3448
	25	170	10.20	0	-	10	-10	100	FKM	221G6136	4538	481000	-	-	-	-	8	2.0	3448
	25	170	10.20	0	-	10	-10	80	FKM	221G6136	-	495905	-	1-21	Ex db mb IIC T4	-	8	2.0	3448

Notes:
1. With silver shading ring
2. For air, the ambient temperature is limited to +25°C, and the max fluid temperature to +40°C
The maximum fluid temperature is given for the lower coil class temperature. See coil pages for more details.

Drawing 8451

Drawing 3448

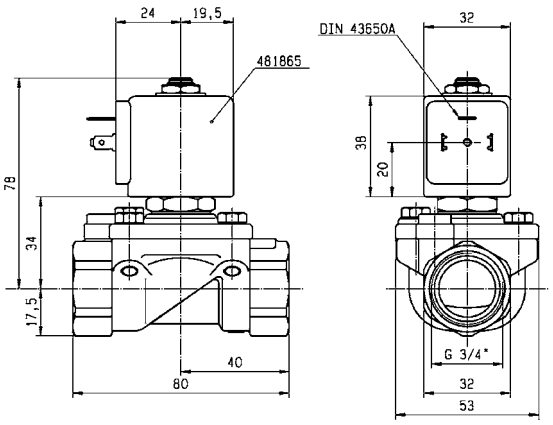

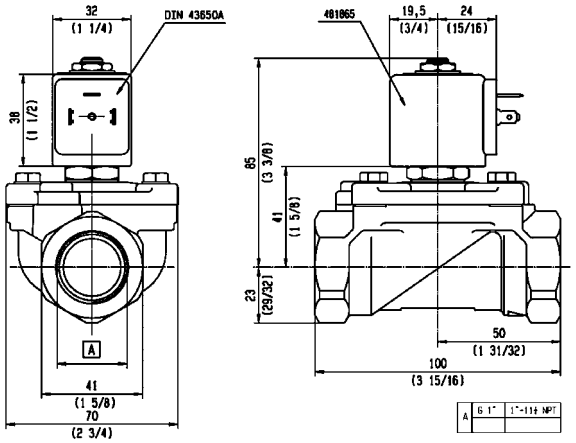

Liquipure® Series

Product Description

Parker Liquipure® Valve Series is the ultimate solution developed by Parker, marking a new standard for Beverage Dispensing and Life Sciences appliances.

For this new valve concept we have selected lead free materials in compliance with the most restrictive standards and regulations, in accordance with Market and People expectations concerning health.
A wide range of Liquipure® valves is also NSF certified. The innovative design makes the product easy to maintain. Liquipure® is interchangeable with 32 x 32 sub base mounting solutions.

Product is available in 2/2 and 3/2 configuration, normally closed. It is also available in 3/2 Universal function making the valve applicable as diverter or selector.

An adapter kit is also offered to convert the product into a pipe mounting version. A wide range of seals is also available, including FKM-FDA, Ruby and EPDM in order to optimize compatibility with the media.

Liquipure® technology is unique, protected by patent and is a registered trademark of Parker Hannifin Corporation.

Applications

Typical applications:

- Coffee Machines, professional, semi-professional and vending
- Water purification and water preparation
- Food & Beverage processing, Healthy Beverage Dispense equipment
- Demineralized water shut off
- Dishwasher disinfectors, hot steam sterilizers

Market of interest:

- Coffee machine
- Beverage dispensing

Benefits

- Healthy and foodstuffs compatible
- Full stainless steel structure
- Wide range of Liquipure® valves is NSF certified
- Increase of reliability: reduction of welding joints
- Easy to maintain: easy and quick access to internal parts for cleaning and service

General Description

Materials in contact with the fluid:

Valve body and seat support: AISI 305 Stainless Steel
Seat: AISI 303 Stainless Steel
Plungers: AISI 430F Stainless Steel
Springs: AISI 302 Stainless Steel
Tube assembly : Stainless Steel

Main seat disc: FKM-FDA, Ruby, EPDM
Exhaust seat disc (static sealing): FKM-FDA
Adapter: AISI 304 Stainless Steel

Media

These valves have been developed to achieve a wide range of chemical compatibilities


Water


Steam

Temperature

The ambient temperature range of the valve is -10°C to +50°C.

Installation

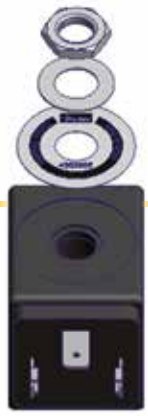

Valves can be mounted in any position, respecting the installation scheme. Valves have been developed to achieve the best performances with water, superheated water and steam.

Maximum recommended media temperature is 140°C.

Parker wide variety of coils including IP65 & IP67 with UL & IEC/CE-NELEC & Dual Frequency.

Each valve must be mounted using 4 screws M4 x 0,7, minimum recommended length: 6.0 mm. It is mandatory to install the valve using 4 screws, for a proper use of it.

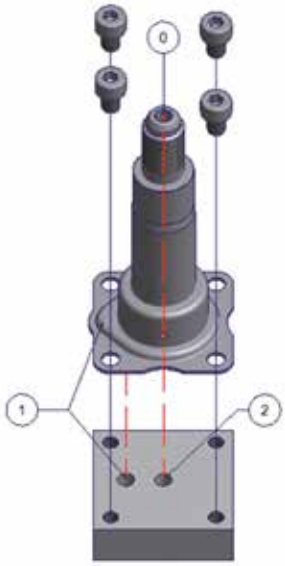

Mounting : Sub-base features (SB)

For Valves with orifice Ø < 3 mm

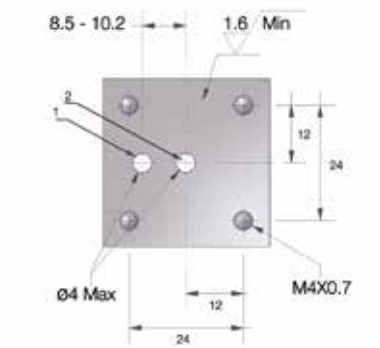

For Valves with orifice Ø > 4.0 mm to 5 mm max

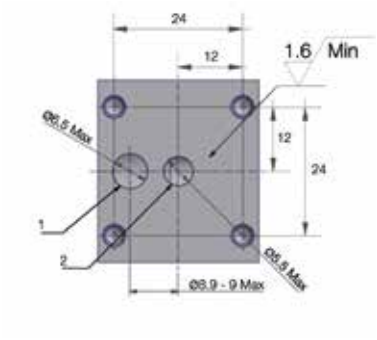

Easy Maintenance

Among the most innovative features of Liquipure® Valve Series you will find an easy and quick access to internal parts, without any specific tools.

The image on the right show how the seat support can be mounted and dismounted to get a quick access to the valve plunger in order to clean it or replace it after a long operating life.

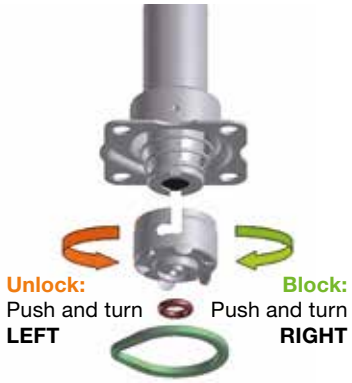

How to Order

Step 1: Select the valve body reference needed

Step 2: Select the coil and the voltage code in coil pages starting from page 45

Step 3: Define the complete assembly numbering system

Step 4: accessories
Din Plug Connector according to DIN EN 175301-803 Form A **600003PLUG** (batch size = 100)

You can now identify the complete Liquipure® designation which must be used to release your order !

Please note: Valve can be ordered according to desired configuration: Valve body and coil separately, Valve body and coil assembled or Valve body, pipe mounting adaptation kit and coil assembled (pipe mounting version)

Liquipure® Series

Valves for beverage dispensing

Direct Operated - Sub-base and orifice from 1.5mm to 5.0mm

305 Stainless St.

Sub-base Mounting

Normally Closed

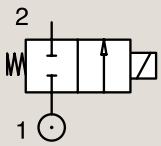

Port Size	Orifice Ø	Flow Factors		Operating Pressure Differential			Fluid Temperature		Seat Seal	Parker Valves		Power		Coil Group	Adapter Kit
		Kv	KV	Min.	Max. (MOPD)		Min.	Max.				AC	DC		
BSP	mm	l/min	m³/h	Bar	AC bar	DC bar	°C	°C		Valve Ref.	Coil Ref.	W	W		
SB	1.5	1.3	0.08	0	20	20	-10	140	Ruby	**2019F1GRG7**[1]	**D5**	8	9	24.0	XGSPG1-XGSPG2
	1.5	1.3	0.08	0	20	20	-10	140	FDA FKM	**2019F1GVG7**[1]	**D5**	8	9	24.0	XGSPG1-XGSPG2
	2.0	2.3	0.14	0	15	15	-10	140	Ruby	**2019F1JRG7**[1]	**D5**	8	9	24.0	XGSPG1-XGSPG2
	2.0	2.3	0.14	0	15	15	-10	140	FDA FKM	**2019F1JVG7**[1]	**D5**	8	9	24.0	XGSPG1-XGSPG2
	2.5	3.2	0.19	0	10	10	-10	140	Ruby	**2019F1LRG7**[1]	**D5**	8	9	24.0	XGSPG1-XGSPG2
	2.5	3.2	0.19	0	10	10	-10	140	FDA FKM	**2019F1LVG7**[1]	**D5**	8	9	24.0	XGSPG1-XGSPG2
	3.0	4.2	0.25	0	7	7	-10	140	Ruby	**2019F1NRG7**[1]	**D5**	8	9	24.0	XGSPG1-XGSPG2
	3.0	4.2	0.25	0	7	7	-10	140	FDA FKM	**2019F1NVG7**[1]	**D5**	8	9	24.0	XGSPG1-XGSPG2
	4.0	6.5	0.39	0	5	5	-10	140	EPDM	**2019F1QEG7**	**D5**	8	9	24.0	XGSPG3
	4.0	6.5	0.39	0	5	5	-10	140	FDA FKM	**2019F1QVG7**[1]	**D5**	8	9	24.0	XGSPG3
	5.0	7.2	0.43	0	3	3	-10	140	EPDM	**2019F1SEG7**	**D5**	8	9	24.0	XGSPG3
	5.0	7.2	0.43	0	3	3	-10	140	FDA FKM	**2019F1SVG7**[1]	**D5**	8	9	24.0	XGSPG3

Notes:
1. NSF Certified
Nominal Pressure = 20 bar

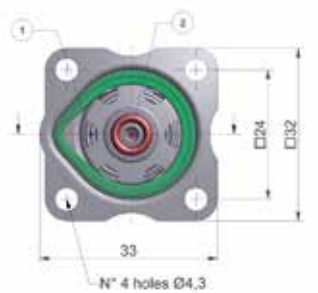

All dimensions are in mm

Liquipure® Series

Valves for beverage dispensing 1/8" G Threaded Male Exhaust Port

Direct Operated - Sub-base and orifice from 1.5mm to 5.0mm

305 Stainless St.

Sub-base Mounting

Normally Closed

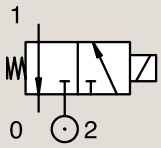

Port Size	Orifice mm 1	Orifice mm (2)	Flow Factors 1 Kv l/min	Flow Factors 1 KV m³/h	Flow Factors (2) Kv l/min	Flow Factors (2) KV m³/h	Operating Pressure Differential Min. Bar	Max. (MOPD) AC bar	Max. (MOPD) DC bar	Fluid Temperature Min. °C	Fluid Temperature Max. °C	Seat Seal	Parker Valves Valve Ref.	Parker Valves Coil Ref.	Power AC W	Power DC W	Coil Group	Adapter Kit
SB	1.5	2.5	1.3	0.08	2.9	0.17	0	14	14	-10	140	Ruby	3019F1GRG7[1]	D5	8	9	24.0	XGSPG1-XGSPG2
	1.5	2.5	1.3	0.08	2.9	0.17	0	14	14	-10	140	FDA FKM	3019F1GVG7[1]	D5	8	9	24.0	XGSPG1-XGSPG2
	2.0	2.5	2.2	0.13	2.9	0.17	0	10	10	-10	140	Ruby	3019F1JRG7[1]	D5	8	9	24.0	XGSPG1-XGSPG2
	2.0	2.5	2.2	0.13	2.9	0.17	0	10	10	-10	140	FDA FKM	3019F1JVG7[1]	D5	8	9	24.0	XGSPG1-XGSPG2
	2.5	2.5	2.8	0.17	2.9	0.17	0	6.5	6.5	-10	140	Ruby	3019F1LRG7[1]	D5	8	9	24.0	XGSPG1-XGSPG2
	2.5	2.5	2.8	0.17	2.9	0.17	0	6.5	6.5	-10	140	FDA FKM	3019F1LVG7[1]	D5	8	9	24.0	XGSPG1-XGSPG2
	3.0	2.5	3.3	0.20	2.9	0.17	0	4	4	-10	140	Ruby	3019F1NRG7[1]	D5	8	9	24.0	XGSPG1-XGSPG2
	3.0	2.5	3.3	0.20	2.9	0.17	0	4	4	-10	140	FDA FKM	3019F1NVG7[1]	D5	8	9	24.0	XGSPG1-XGSPG2
	4.0	2.5	6.5	0.39	2.9	0.17	0	3	3	-10	140	EPDM	3019F1QEG7	D5	8	9	24.0	XGSPG3
	4.0	2.5	6.5	0.39	2.9	0.17	0	3	3	-10	140	FDA FKM	3019F1QVG7[1]	D5	8	9	24.0	XGSPG3
	5.0	2.5	7.2	0.43	2.9	0.17	0	2	2	-10	140	EPDM	3019F1SEG7	D5	8	9	24.0	XGSPG3
	5.0	2.5	7.2	0.43	2.9	0.17	0	2	2	-10	140	FDA FKM	3019F1SVG7[1]	D5	8	9	24.0	XGSPG3

Notes:
1. NSF Certified
Nominal Pressure = 20 bar

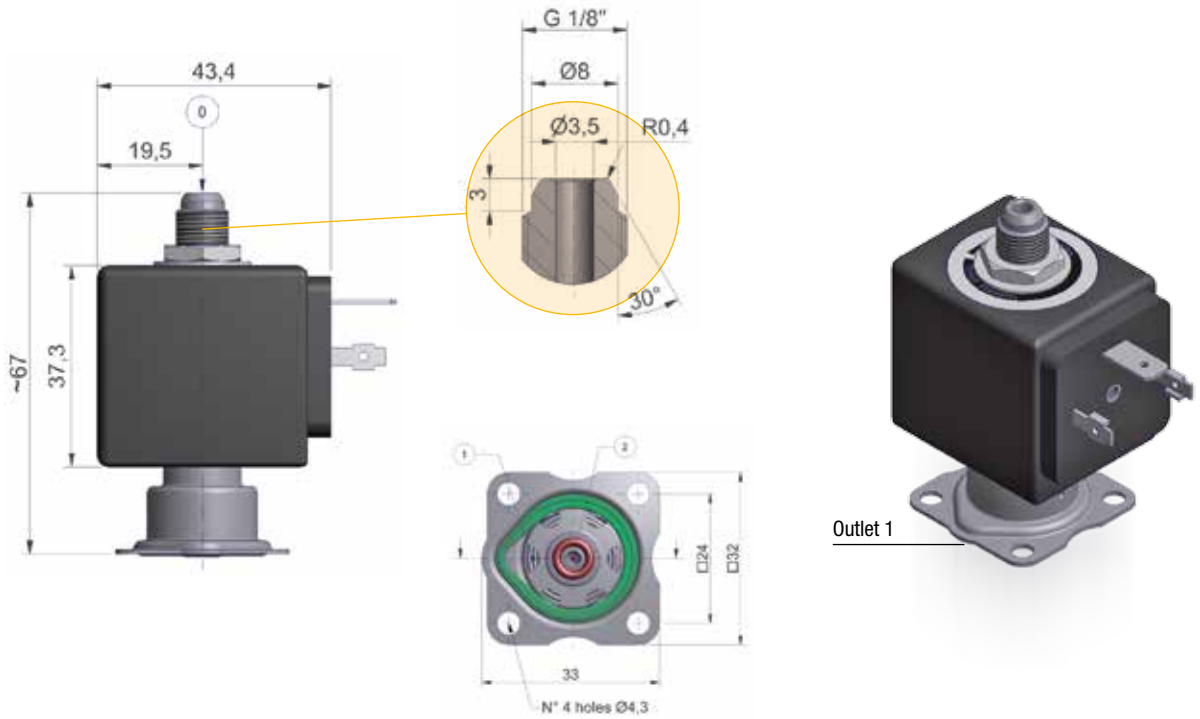

All dimensions are in mm

Liquipure® Series

Valves for beverage dispensing Hose Bib at Exhaust Port

Direct Operated - Sub-base and orifice from 1.5mm to 5.0mm

305 Stainless St.

Sub-base Mounting

Normally Closed

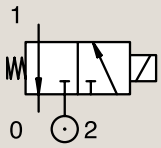

Port Size	Orifice mm 1	Orifice mm (2)	Flow Factors 1 Kv l/min	Flow Factors 1 KV m³/h	Flow Factors (2) Kv l/min	Flow Factors (2) KV m³/h	Operating Pressure Differential Min. Bar	Max. (MOPD) AC bar	Max. (MOPD) DC bar	Fluid Temperature Min. °C	Fluid Temperature Max. °C	Seat Seal	Parker Valves Valve Ref.	Parker Valves Coil Ref.	Power AC W	Power DC W	Coil Group	Adapter Kit
SB	1.5	2.5	1.3	0.08	2.9	0.17	0	14	14	-10	140	Ruby	**301XGFRTG7$_1$**	**D5**	8	9	24.0	XGSPG1-XGSPG2
	1.5	2.5	1.3	0.08	2.9	0.17	0	14	14	-10	140	FDA FKM	**301XGFVTG7$_1$**	**D5**	8	9	24.0	XGSPG1-XGSPG2
	2.0	2.5	2.2	0.13	2.9	0.17	0	10	10	-10	140	Ruby	**301XGFRTJ7$_1$**	**D5**	8	9	24.0	XGSPG1-XGSPG2
	2.0	2.5	2.2	0.13	2.9	0.17	0	10	10	-10	140	FDA FKM	**301XGFVTJ7$_1$**	**D5**	8	9	24.0	XGSPG1-XGSPG2
	2.5	2.5	2.8	0.17	2.9	0.17	0	6.5	6.5	-10	140	Ruby	**301XGFRTL7$_1$**	**D5**	8	9	24.0	XGSPG1-XGSPG2
	2.5	2.5	2.8	0.17	2.9	0.17	0	6.5	6.5	-10	140	FDA FKM	**301XGFVTL7$_1$**	**D5**	8	9	24.0	XGSPG1-XGSPG2
	3.0	2.5	4.2	0.25	2.9	0.17	0	4	4	-10	140	Ruby	**301XGFRTN7$_1$**	**D5**	8	9	24.0	XGSPG1-XGSPG2
	3.0	2.5	4.2	0.25	2.9	0.17	0	4	4	-10	140	FDA FKM	**301XGFVTN7$_1$**	**D5**	8	9	24.0	XGSPG1-XGSPG2
	4.0	2.5	6.5	0.39	2.9	0.17	0	3	3	-10	140	EPDM	**301XGFETQ7**	**D5**	8	9	24.0	XGSPG3
	4.0	2.5	6.5	0.39	2.9	0.17	0	3	3	-10	140	FDA FKM	**301XGFVTQ7$_1$**	**D5**	8	9	24.0	XGSPG3
	5.0	2.5	7.2	0.43	2.9	0.17	0	2	2	-10	140	EPDM	**301XGFETS7**	**D5**	8	9	24.0	XGSPG3
	5.0	2.5	7.2	0.43	2.9	0.17	0	2	2	-10	140	FDA FKM	**301XGFVTS7$_1$**	**D5**	8	9	24.0	XGSPG3

Notes:
1. NSF Certified
Nominal Pressure = 20 bar

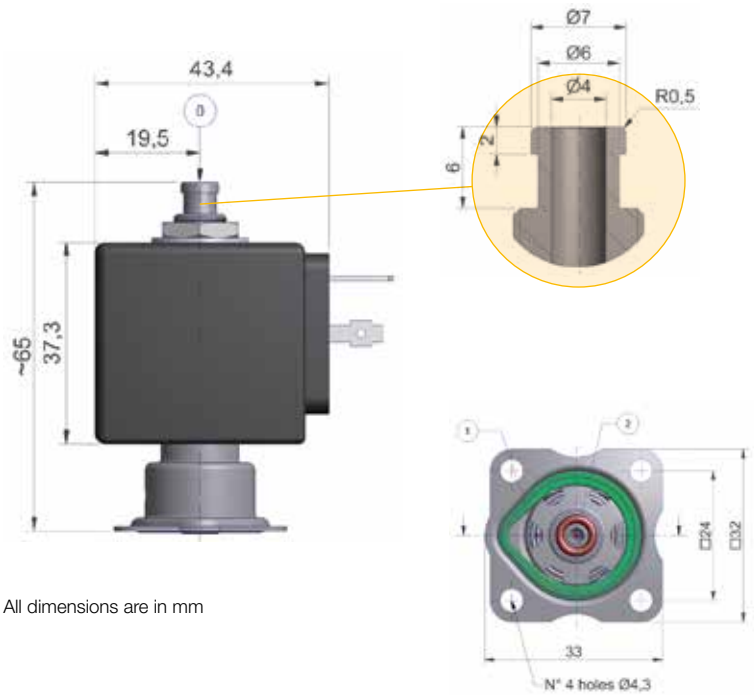

All dimensions are in mm

Liquipure® Series

Valves for beverage dispensing 1/8"G threaded Male Exhaust Port

Direct Operated - Sub-base and orifice from 1.5mm to 3.0mm

305 Stainless St.

Sub-base Mounting

Universal

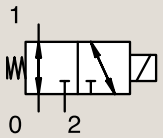

Port Size	Orifice mm 1	Orifice mm (2)	Flow Factors 1 Kv l/min	Flow Factors 1 KV m³/h	Flow Factors (2) Kv l/min	Flow Factors (2) KV m³/h	Operating Pressure Differential Min. Bar	Max. (MOPD) AC bar	Max. (MOPD) DC bar	Fluid Temperature Min. °C	Fluid Temperature Max. °C	Seat Seal	Parker Valves Valve Ref.	Coil Ref.	Power AC W	Power DC W	Coil Group	Adapter Kit
SB	1.5	1.5	1.4	0.08	1.3	0.08	0	9.5	9.5	-10	140	EPDM	**3039F1GEG7**	**D5**	8	9	24.0	XGSPG1-XGSPG2
	1.5	1.5	1.4	0.08	1.3	0.08	0	9.5	9.5	-10	140	FDA FKM	**3039F1GVG7**[1]	**D5**	8	9	24.0	XGSPG1-XGSPG2
	2.0	2.0	2.1	0.13	2	0.12	0	3.5	3.5	-10	140	EPDM	**3039F1JEG7**	**D5**	8	9	24.0	XGSPG1-XGSPG2
	2.0	2.0	2.1	0.13	2	0.12	0	3.5	3.5	-10	140	FDA FKM	**3039F1JVG7**[1]	**D5**	8	9	24.0	XGSPG1-XGSPG2
	2.5	2.5	2.8	0.17	2.8	0.17	0	2	2	-10	140	EPDM	**3039F1LEG7**	**D5**	8	9	24.0	XGSPG1-XGSPG2
	2.5	2.5	2.8	0.17	2.8	0.17	0	2	2	-10	140	FDA FKM	**3039F1LVG7**[1]	**D5**	8	9	24.0	XGSPG1-XGSPG2
	3.0	2.5	3.3	0.20	2.8	0.17	0	2	2	-10	140	EPDM	**3039F1NEG7**	**D5**	8	9	24.0	XGSPG1-XGSPG2
	3.0	2.5	3.3	0.20	2.8	0.17	0	2	2	-10	140	FDA FKM	**3039F1NVG7**[1]	**D5**	8	9	24.0	XGSPG1-XGSPG2

Notes:
1. NSF Certified
Nominal Pressure = 20 bar

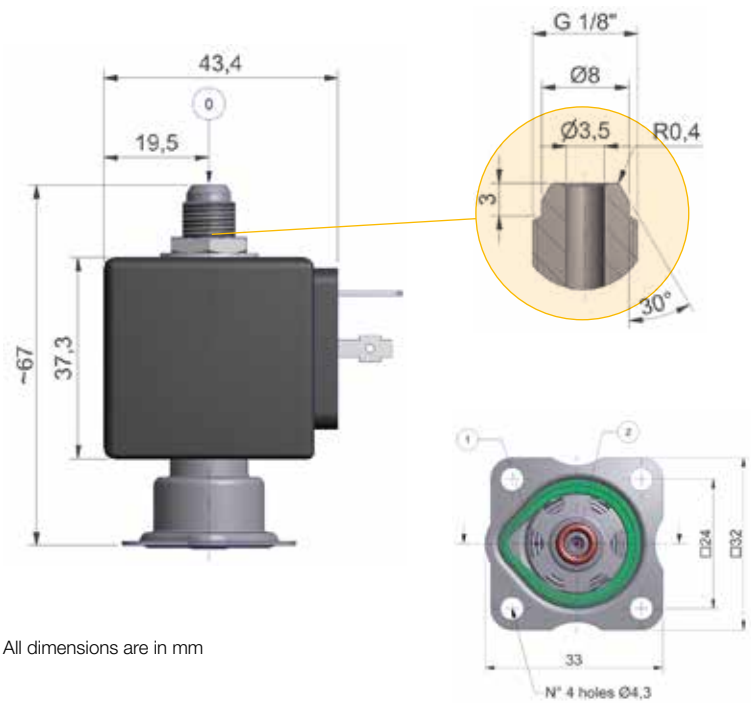

All dimensions are in mm

Liquipure® Adapter

Easy mounting for all applications

Adapter kits are available for all Liquipure® Valves in 1/8” or 1/4”G.

Port Size	Part Number	Material	Kit Including	Compatible with Valves with
1/8"G	**XGSPG1**	AISI 304	fixing screws	any < 3.0 mm orifice
1/4"G	**XGSPG2**	AISI 304	fixing screws	any < 3.0 mm orifice
1/4"G	**XGSPG3**	AISI 304	fixing screws	4.0 mm to 5 mm orifice

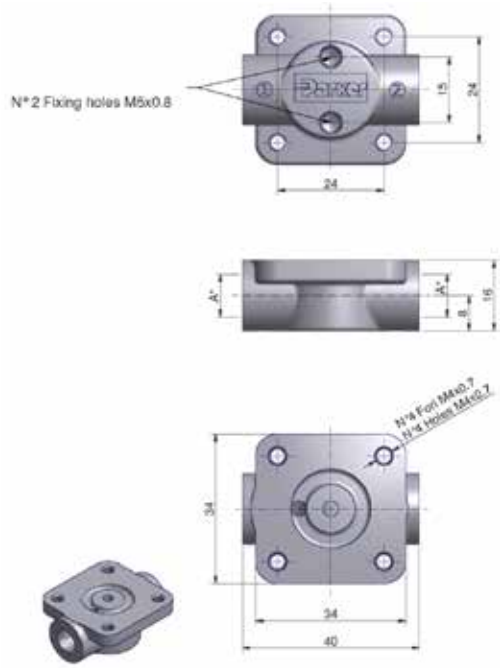

All dimensions are in mm

Spare Parts

Plunger Service Kit

Plunger Type	Main Seat Seals	Part Number	To be used with	Box Quantity
2 Ways	FKM FDA	**7GRP01**	2019F1 FKM FDA Seals version	50
3 Ways	FKM FDA	**7GRP02**	3019F1-301XG FKM FDA Seals version	50
2 Ways	Ruby	**7GRP03**	2019F1 Ruby Seals version	50
3 Ways	Ruby	**7GRP04**	3019F1-301XG Ruby Seals version	50
2 Ways	FKM FDA	**7GRP05**	2019F1QVG7 FKM FDA Seals version	50
3 Ways	FKM FDA	**7GRP06**	3019F1QVG7-301XGFVTQ7 FKM FDA Seals version	50
2 Ways	EPDM	**7GRP07**	2019F1SVG7 EPDM Seals version	50
3 Ways	EPDM	**7GRP08**	3019F1SVG7-301XG EPDM Seals version	50

Note: contains plunger only

Flange Interface Seals

Seals Type	Seals Material	Part Number	To be used with	Box Quantity
Flange Interface Seals	FKM FDA	**7GRS01**	any version	50

501C Series

Product Description

The new 501C Stainless Steel is the right answer to complete on healthy valve range for professional coffee machine, water dispenser and vending machines.

For this new valve, we have selected lead free materials in compliance with the most restrictive standards and regulations, in accordance with market and people expectations concerning health.

Fully made of Stainless Steel, with FKM FDA robust seals, in order to give you the best Foodstuff Compatibility. This new stainless steel product family is NSF certified.

Thanks to the modular concept, a wide range of electrical parts can be used, including F Class, IP67, H Class, reduced power and UL/VDE approved.

Applications

Market of interest:

- Life Sciences
- Food & Beverage Processing
- Commercial Equipment
- Industrial equipment
- Waste Water treatment

Typical applications:

- Water purification and preparation devices
- Food & Beverage processing, Healthy Beverage Dispense equipment
- Demineralized water shut off, cooling of medical and surgical devices
- Dishwasher disinfectors, Laboratory and high end hot steam sterilizers
- Aggressive liquids shut-off

Benefits

The most valuable features you will find in this product range:

- High grade corrosion resistant valve body
- NSF certified references available
- FFKM seal option for superior endurance in heavy duty conditions
- Modular concept: a wide range of electrical parts can be used with this family, including ATEX, low power, IP67, UL/VDE approved
- Robust and solid design

These valves have been developed to achieve a wide range of chemical compatibilities


Water


Steam

General Description

Materials in contact with the fluid

Valve Body:
AISI 303 Stainless Steel

Seat:
AISI 303 Stainless Steel

Plungers:
AISI 430F Stainless Steel

Springs:
AISI 302 Stainless Steel

Main Seat disc:
FKM, FFKM

Shading ring:
Copper

Tube assembly:
AISI 303 Stainless Steel
AISI 305 Stainless Steel

Installation

The valves can be mounted in any position. It is however recommended to install them with the coil in vertical position above the body.

Media

These valves have been developed to achieve the best performances with a wide range of media.

Temperature

The ambient temperature range of the valve is -10°C to +50°C.

Coils

A wide range of coils can be used with this range.
The complete coil range is described in pages 45 to 69.

How to Order

Step 1: Select the valve body reference needed from page 31 **Example: 501CG1GVG7**

Step 2: Select the coil and the voltage code in coil pages starting from page 45. **Example: D5B Series**

Step 3: You can now identify the complete 501C designation which must be used to release your order!
Example: 501CGV7D5B.

Step 4: Accessories
Din Plug Connector according to DIN EN 175301-803 Form A **600003PLUG** (batch size = 100)

Please note: Valve can be ordered according to desired configuration: Valve body and coil separately, Valve body and coil assembled or Valve body, pipe mounting adaptation kit and coil assembled (pipe mounting version)

2/2

501C Series

Valves for beverage dispensing

Direct Operated - Port size from 1/8" to 1/4" and orifice from 1.5mm to 2.5mm

303 Stainless St.

Pipe Mounting

Normally Closed

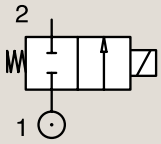

Port Size	Orifice Ø	Flow Factors		Operating Pressure Differential			Fluid Temperature		Seat Seal	Parker Valves		Power		Coil Group
		Kv	KV	Min.	Max. (MOPD)		Min.	Max.				AC	DC	
G	mm	l/min	m³/h	Bar	AC bar	DC bar	°C	°C		Valve Ref.	Coil Ref.	W	W	
1/8"	1.5	1.1	0.06	0	14	14	-10	140	FDA FKM	501CG1GVG7	D5	8	9	24.0
	2.5	2.5	0.15	0	12	12	-10	140	FDA FKM	501CG1LVG7	D5	8	9	24.0
1/4"	1.5	1.1	0.06	0	14	14	-10	140	FDA FKM	501CG2GVG7	D5	8	9	24.0
	2.5	2.5	0.15	0	12	12	-10	140	FDA FKM	501CG2LVG7	D5	8	9	24.0

Notes:
All the references listed in this chart are NSF certified.

Dimensional References:

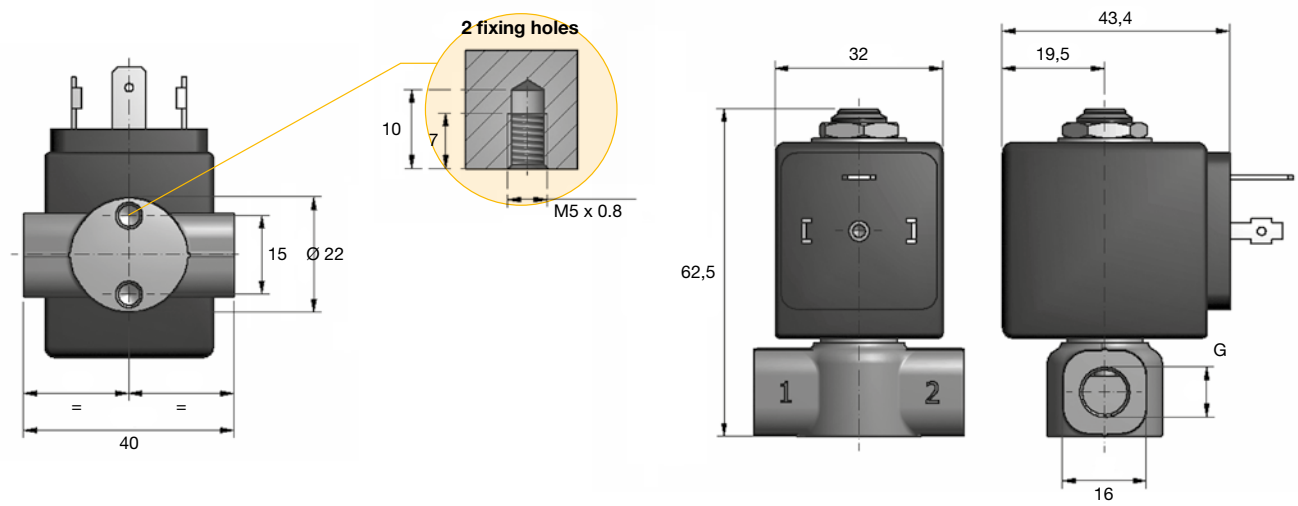

Electrical Parts Availability:

Product line is compatible with a wide range of coils including Mono and Double Frequency solutions, 2P+E connection according with DIN EN 175301-803, Form A and flying leads versions.

X Series

Product Description

Universal 3 ways valves 1/4" NPTF with 316L material body for ATEX zones from zone 0 to zone 2 or with standard coils for non ATEX applications.

Available with manual reset.

Applications

Market of interest:

- Process
- Oil & Gas

Typical applications:

- Valve actuation control

Benefits

The most valuable features you will find in this product range:

- High grade corrosion resistant valve body, AISI 316L
- Modular concept: a wide range of electrical parts can be used with this family, including ATEX, low power, IP67, UL/VDE approved
- Robust and solid design
- Compact coils
- Easy maintenance
- Quick coil removal

General Description

Material Specifications

Valve Body:

AISI 316L Stainless Steel

Seals:

NBR

Installation

The valves can be mounted in any position. It is however recommended to install them with the coil in vertical position above the body.

Media

These valves have been developed to achieve the best performances with air & neutral gas

Temperature

The ambient temperature range of the valve is -25°C to +65°C. **For ATEX environments:** temperature can be limited by the max ambient temperature of the coil. See coil pages.

Coils

A wide range of coils can be used with this range.

The complete coil range is described in pages 45 to 69.

How to Order

A complete solenoid valve is composed by 2 elements: the **valve body** and the **coil**.

Step 1: Select the valve body reference needed **Example: U033X7156**

Step 2: Select the coil ref. + voltage code.
Find the voltage code in coil pages starting from page 45 **Example: 496565N7**

Step 5: The complete assembly numbering system is **: Example U033X7156-496565N7**

Step 4: accessories
Din Plug Connector according to DIN EN 175301-803 Form A **48658640** (batch size = 25)

You can now identify the complete Ux33X designation which must be used to release your order !

Please note: Valve can be ordered according to desired configuration: Valve body and coil separately, Valve body and coil assembled

Ux33X Series

3 & 5 way valves for actuator control

Direct Operated - Port size 1/4" and orifice 6.0mm

316L Stainless St.

Pipe Mounting

Universal

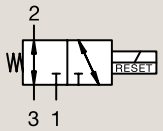

Port Size	Orifice Ø	Flow Factors Kv	Flow Factors KV	Operating Pressure Differential Min.	Operating Pressure Differential Max. (MOPD)		Fluid Temperature Min.	Fluid Temperature Max.	Seat Seal	Parker Valves			IS	ATEX Zone	Protection Mode	Power AC	Power DC	Coil Group	Dwg N°
	mm	l/min	m³/h	Bar	AC bar	DC bar	°C	°C		Valve Ref.	Housing Ref.	Coil Ref.				W	W		
1/4"	6.0	9.0	0.54	0	-	12	-25	65	NBR	U033X7156$_2$	-	496565	√	0-20	Ex ia IIC T4 to T6	-	0.8-2.6	9.0/10.1/10.2	8168
	6.0	9.0	0.54	0	12	12	-25	65	NBR	U033X7156$_2$	-	496700	-	1-21	Ex db mb IIC T4 to T6	6	6	9.0/10.1/10.2	8168
	6.0	9.0	0.54	0	12	12	-25	65	NBR	U033X7156$_2$	-	496895	-	-	-	8	8	9.0/10.1/10.2	8168
	6.0	9.0	0.54	0	12	12	-25	65	NBR	U033X7156$_2$	-	497105	√	1-21	Ex db IIC T4 to T6	8	8	9.0/10.1/10.2	8308
	6.0	9.0	0.54	0	-	12	-25	65	NBR	U133X7156$_1$	-	496565	√	0-20	Ex ia IIC T4 to T6	-	0.8-2.6	9.0/10.1/10.2	8168
	6.0	9.0	0.54	0	12	12	-25	65	NBR	U133X7156$_1$	-	496700	-	1-21	Ex db mb IIC T4 to T6	6	6	9.0/10.1/10.2	8168
	6.0	9.0	0.54	0	12	12	-25	65	NBR	U133X7156$_1$	-	496895	-	-	-	8	8	9.0/10.1/10.2	8168
	6.0	9.0	0.54	0	12	12	-25	65	NBR	U133X7156$_1$	-	497105	√	1-21	Ex db IIC T4 to T6	8	8	9.0/10.1/10.2	8308
	6.0	9.0	0.54	0	-	12	-25	65	NBR	U133X7196	-	496565	√	0-20	Ex ia IIC T4 to T6	-	0.8-2.6	9.0/10.1/10.2	8314
	6.0	9.0	0.54	0	12	12	-25	65	NBR	U133X7196	-	496700	-	1-21	Ex db mb IIC T4 to T6	6	6	9.0/10.1/10.2	8314
	6.0	9.0	0.54	0	12	12	-25	65	NBR	U133X7196	-	496895	-	-	-	8	8	9.0/10.1/10.2	8314
	6.0	9.0	0.54	0	12	12	-25	65	NBR	U133X7196	-	497105	√	1-21	Ex db IIC T4 to T6	8	8	9.0/10.1/10.2	8314

Notes:
1. With manual override
2. With manual reset

The maximum fluid temperature is given for the lower coil class temperature. See coil pages for more details.

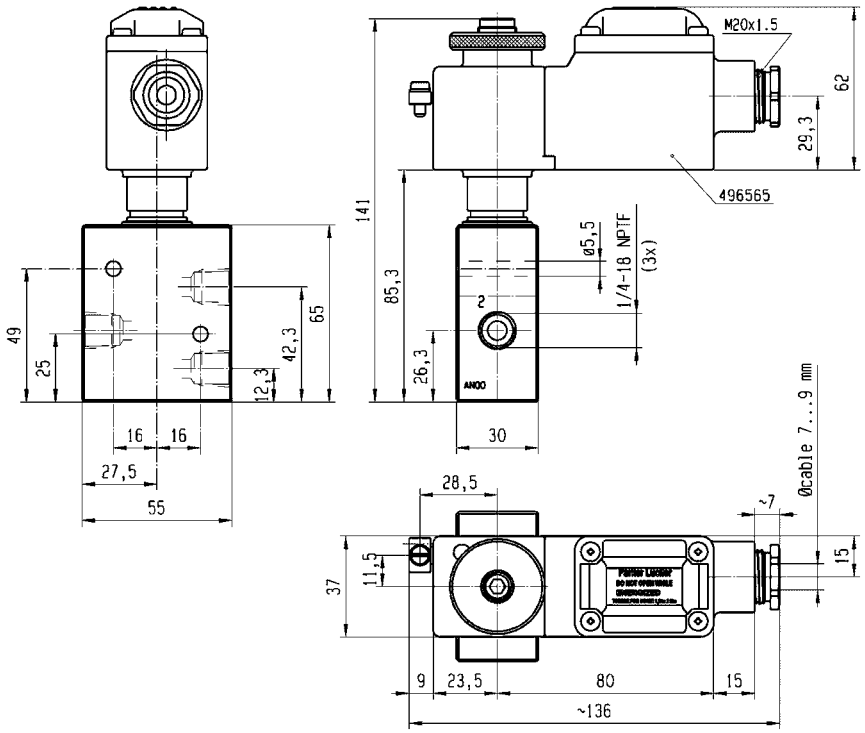

Drawing 8168

Ux33X Series

3 & 5 way valves for actuator control

Direct Operated - Port size 1/4" and orifice 6.0mm

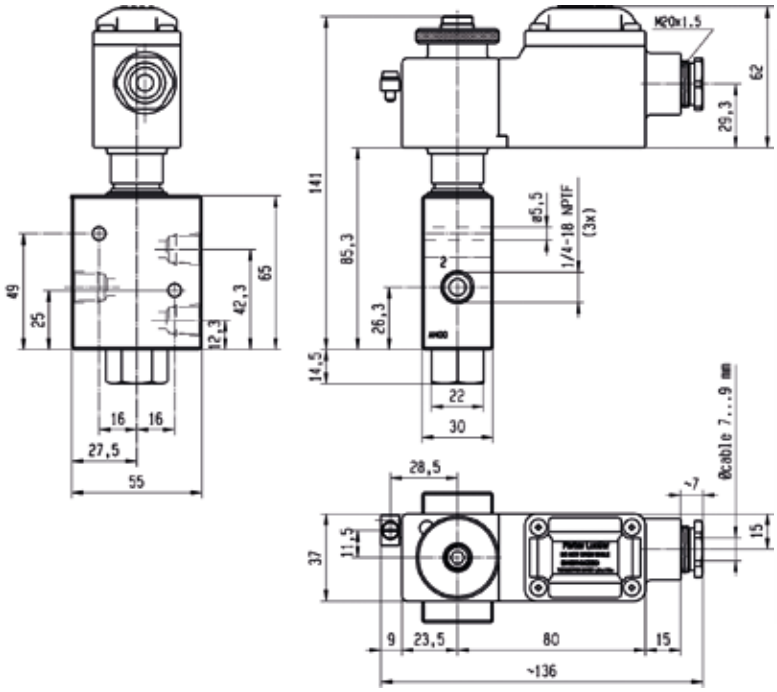

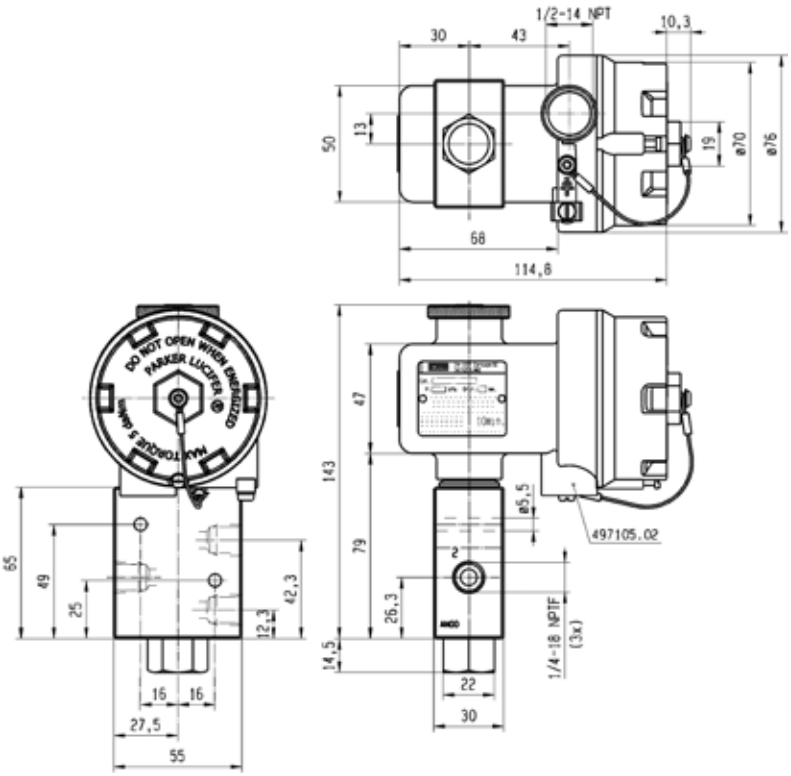

Drawing 8308

Angle Seat Valves PA Series

Product Description

An angle seat valve is actuated by a pneumatically driven piston and is capable to handle slurry solutions with particles or corrosive solutions at high temperature up to 180°C and operating pressure up to 16 Bar.

Applications

Market of interest:

- Life Sciences
- Food & Beverage Processing
- Industrial Equipment
- Commercial Equipment
- Waste Water treatment
- Textile industry

Typical applications:

- Sterilizers steam supply
- Dishwasher disinfectors, Laboratory and high end hot steam sterilizers
- Pharmaceutical, Chemical & Cosmetic industry

Benefits

The most valuable features you will find in this product range:

- **Compact** design, high flow rates
- Visual **position indicator**
- For temperatures from -10°C to **180°C**
- Working pressures up to **16 Bar**
- Fluid **Viscosity up to 600 mm²/s** (600cSt, 80° E, 2700 SSU)
- Dampened closing **anti-water hammer** design (fluid under seat)
- Stainless Steel actuator housing for exceptional durability in **steam and aggressive applications**
- Valves meeting Pressure Equipment Directive 97/23/EC
- Mountable **in any position**
- Tight shut-off and Long Service Life
- Parker Angle Seat Valves conform to the terms of the 94/9/CE directive specific to non electrical equipment for use within potentially explosive environments - **zones 1/21 and 2/22**

General Description

Material Specifications

Valve Body:
ANSI 316L Stainless Steel

Seals:
PTFE/RTFE

Nozzle:
ANSI 316L Stainless Steel

Sealings:
PTFE/RTFE for seat seal material
PTFE with carbon for packing gland (EPDM for 100°c versions)

Temperature

The ambient temperature range of the valve is -10°C to +60°C.
For ATEX environments: temperature can be limited by the max ambient temperature of the coil.
See coil pages.

Please note that for liquids use the versions with flow direction under the seat to avoid water hammer effect

Accessories :

- 3 Way Direct Acting AC & DC Pilot Control Valves available as separate components

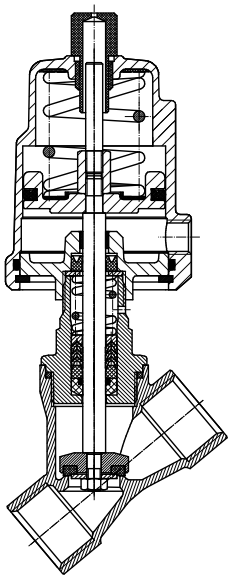

Normally Closed Valve

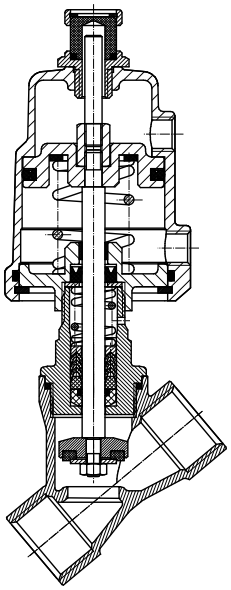

Normally Open Valve

How to Order

Select the complete valve in the tables in next pages
EXAMPLE: PA10C1G3R032S

PA Series

Flow Direction Over Seat

Air Operated - Port size from 3/8" to 2-1/2" and orifice from 13.0mm to 65.0mm

316L S.Steel Body / 304 S.Steel Actuator

Pipe Mounting

Normally Closed

Size	Port Size BSP	Orifice Ø mm	Actuator mm	KV m³/h	Operating Pressure Differential bar	Minimum Pilot Control Pressure Range bar	Fluid Temperature Min. C°	Fluid Temperature Max. C°	Parker Valves Valve Reference
DN10	3/8"	13	32	4.7	0-16	4.5-6	-10	180	PA10C1G3R032S
		13	32	4.7	0-16	4.5-6	-10	100	PA10C3G3R032S
		13	40	4.7	0-16	4	-10	180	PA10S1G3R040S
		13	50	4.7	0-16	3	-10	180	PA10S1G3R050S
DN15	1/2"	13	32	4.7	0-16	4.5-6	-10	180	PA15C1G4R032S
		13	32	4.7	0-16	4.5-6	-10	100	PA15C3G4R032S
		13	40	4.7	0-16	4	-10	180	PA15S1G4R040S
		13	50	4.7	0-16	3	-10	180	PA15S1G4R050S
DN20	3/4"	15	32	5.4	0-14	4.5-6	-10	180	PA20C1G5R032S
		15	32	5.4	0-14	4.5-6	-10	100	PA20C3G5R032S
		18	50	9.0	0-16	3-4	-10	180	PA20S1G5R050S
DN25	1"	24	50	16.0	0-16	3-5.5	-10	180	PA25S1G6R050S
		24	63	16.0	0-16	3-3.5	-10	180	PA25S1G6R063S
DN32	1-1/4"	31	63	24.0	0-16	3-5	-10	180	PA32S1G7R063S
DN40	1-1/2"	35	63	32.0	0-16	3-6	-10	180	PA40S1G8R063S
DN50	2"	45	63	50.0	0-10	3-6.5	-10	180	PA50S1G9R063S
		45	80	50.0	0-16	3-6.6	-10	180	PA50S1G9R080S
		45	100	50.0	0-16	3-5	-10	180	PA50S1G9R100S
DN65	2-1/2"	65	100	70.0	0-10	3-6	-10	180	PA65S1GTR100S

316L S.Steel Body / Aluminium Actuator

Pipe Mounting

Normally Closed

Size	Port Size	Orifice Ø mm	Actuator mm	KV m³/h	Operating Pressure Differential bar	Minimum Pilot Control Pressure Range bar	Fluid Temperature Min. C°	Fluid Temperature Max. C°	Parker Valves Valve Reference
DN10	3/8"	13	50	4.7	0-16	3	-10	180	PA10S1G3R050A
DN15	1/2"	13	50	4.7	0-16	3	-10	180	PA15S1G4R050A
DN20	3/4"	18	50	9.0	0-16	3-4	-10	180	PA20S1G5R050A
DN25	1"	24	50	16.0	0-16	3-5.5	-10	180	PA25S1G6R050A
		24	63	16.0	0-16	3-4	-10	180	PA25S1G6R063A
DN32	1-1/4"	31	63	24.0	0-16	3-5.5	-10	180	PA32S1G7R063A
DN40	1-1/2"	35	63	32.0	0-16	3-6.5	-10	180	PA40S1G8R063A
DN50	2"	45	63	50.0	0-10	3-6.5	-10	180	PA50S1G9R063A
		45	80	50.0	0-16	3-6.6	-10	180	PA50S1G9R080A
		45	100	50.0	0-16	3-5	-10	180	PA50S1G9R100A
DN65	2-1/2"	65	100	70.0	0-10	3-6	-10	180	PA65S1GTR100A

Control & Operating Pressure Charts for the normally Closed Valves with flow over seat

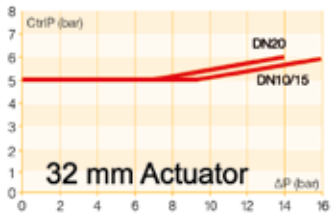

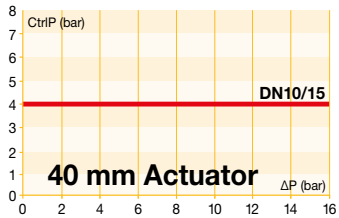

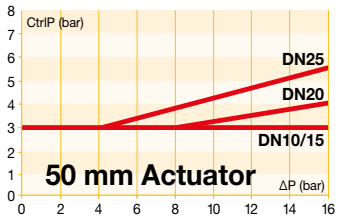

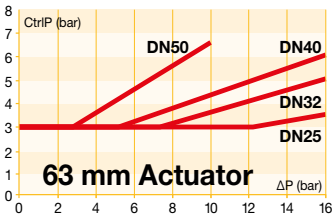

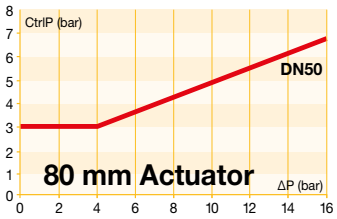

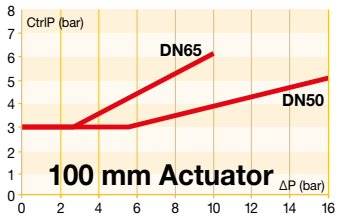

Flow Diagram Over Seat

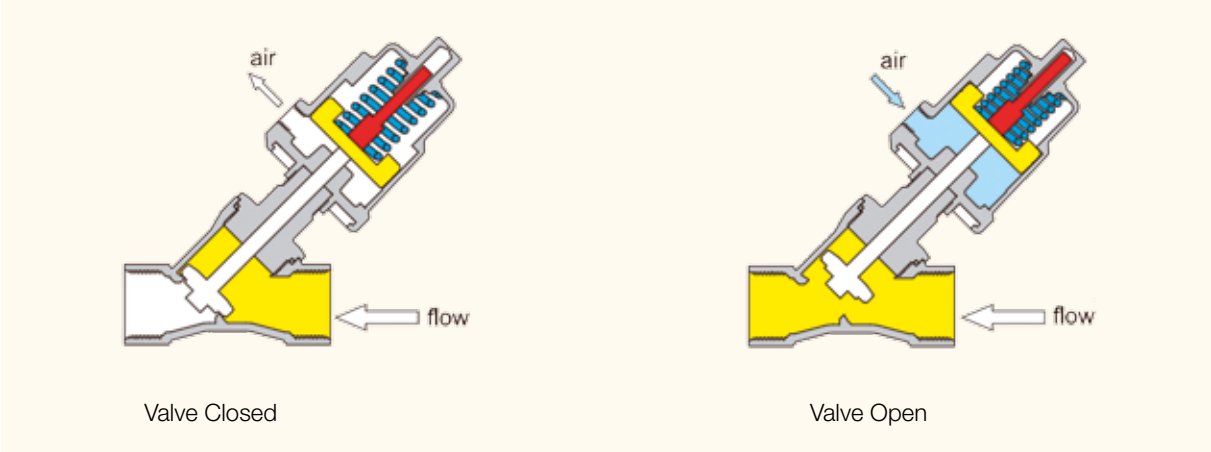

PA Series

Flow Direction Over Seat

Air Operated - Port size from 3/8" to 2"and orifice from 13.0mm to 45.0mm

316L S.Steel Body / 304 S.Steel Actuator

Pipe Mounting

Normally Open

Size	Port Size	Orifice Ø mm	Actuator mm	KV m³/h	Operating Pressure Differential bar	Minimum Pilot Control Pressure Range bar	Fluid Temperature Min. C°	Fluid Temperature Max. C°	Parker Valves Valve Reference
DN10	3/8"	13	50	4.7	0-16	3.5	-10	180	PA10S2G3R050S
DN15	1/2"	13	50	4.7	0-16	3.5	-10	180	PA15S2G4R050S
DN20	3/4"	18	50	9.0	0-16	3.5	-10	180	PA20S2G5R050S
DN25	1"	24	63	16.0	0-16	4.5	-10	180	PA25S2G6R063S
DN32	1-1/4"	31	63	24.0	0-14	4.5	-10	180	PA32S2G7R063S
DN40	1-1/2"	35	63	32.0	0-11	4.5	-10	180	PA40S2G8R063S
DN50	2"	45	63	50.0	0-6	5	-10	180	PA50S2G9R063S
		45	80	50.0	0-12	5	-10	180	PA50S2G9R080S

Control & Operating Pressure

Please note : Charts do not apply for Normally Open Valves. A minimum pressure as noted above is all that is required, up to 10 bar Maximum.

Flow Diagram Over Seat

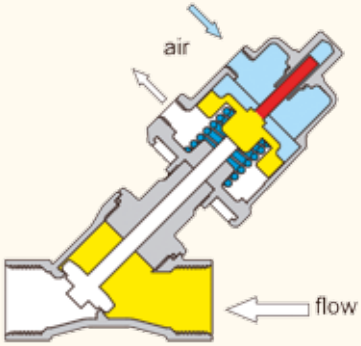

Valve Closed

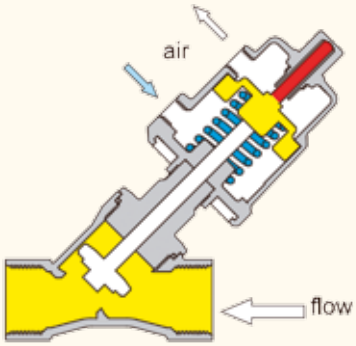

Valve Open

PA Series

Flow Direction Under Seat with Anti Water Hammer Construction

Air Operated - Port size from 3/8" to 2"and orifice from 13.0mm to 45.0mm

316L S.Steel Body / 304 S.Steel Actuator

Pipe Mounting

Normally Closed

Size	Port Size	Orifice Ø mm	Actuator mm	KV m³/h	Operating Pressure Differential bar	Minimum Pilot Control Pressure Range bar	Fluid Temperature Min. C°	Fluid Temperature Max. C°	Parker Valves Valve Reference
DN10	3/8"	13	32	4.7	0-6	5-6	-10	180	PA10C2G3R032S
		13	32	4.7	0-6	5-6	-10	100	PA10C4G3R032S
		13	50	4.7	0-16	4.5	-10	180	PA10SAG3R050S
DN15	1/2"	13	32	4.7	0-6	5-6	-10	180	PA15C2G4R032S
		13	32	4.7	0-6	5-6	-10	100	PA15C4G4R032S
		13	50	4.7	0-16	4.5	-10	180	PA15SAG4R050S
DN20	3/4"	15	32	5.4	0-4	5-6	-10	180	PA20C2G5R032S
		15	32	5.4	0-4	5-6	-10	100	PA20C4G5R032S
		18	50	9.0	0-10	4.5	-10	180	PA20SAG5R050S
DN25	1"	24	63	16.0	0-8	4.5	-10	180	PA25SAG6R063S
DN32	1-1/4"	31	80	24.0	0-11	4	-10	180	PA32SAG7R080S
DN40	1-1/2"	35	80	32.0	0-8	4	-10	180	PA40SAG8R080S
		35	100	32.0	0-16	4	-10	180	PA40SAG8R100S
DN50	2"	45	100	50.0	0-9	4	-10	180	PA50SAG9R100S

316L S.Steel Body / Aluminium Actuator

Pipe Mounting

Normally Closed

Size	Port Size	Orifice Ø mm	Actuator mm	KV m³/h	Operating Pressure Differential bar	Minimum Pilot Control Pressure Range bar	Fluid Temperature Min. C°	Fluid Temperature Max. C°	Parker Valves Valve Reference
DN10	3/8"	13	50	4.7	0-16	4.5	-10	180	PA10SAG3R050A
DN15	1/2"	13	50	4.7	0-16	4.5	-10	180	PA15SAG4R050A
DN20	3/4"	18	50	9.0	0-10	4.5	-10	180	PA20SAG5R050A
DN25	1"	24	63	16.0	0-8	4.5	-10	180	PA25SAG6R063A
DN32	1-1/4"	31	80	24.0	0-11	4	-10	180	PA32SAG7R080A
DN40	1-1/2"	35	80	32.0	0-8	4	-10	180	PA40SAG8R080A
		35	100	32.0	0-16	4	-10	180	PA40SAG8R100A
DN50	2"	45	100	50.0	0-9	4	-10	180	PA50SAG9R100A

Control & Operating Pressure

Please note : Charts do not apply for Valves with flow direction Under Seat. A minimum pressure as noted above is all that is required, up to a maximum of 10 bar.

Flow Diagram Under Seat

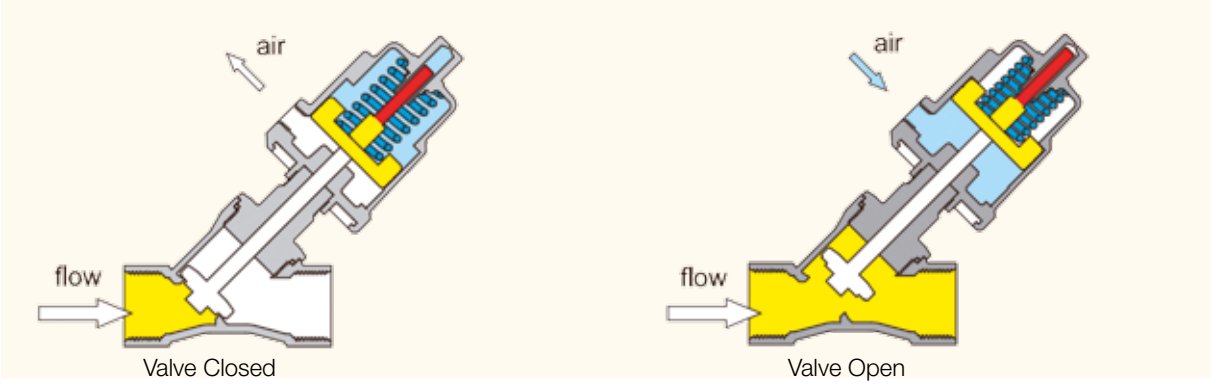

Valve Closed

Valve Open

PA Series - Drawings and Dimensions

Stainless Steel Actuators Size 32 mm

Type	Actuator	Ø B	R	G1	K2		A2		G	L	T	SW
					Type C1/C2 (180°C)	Type C3/C4 (100°C)	Type C1/C2 (180°C)	Type C3/C4 (100°C)				
DN10	32	39.6	27	G1/8	107	94	117	106	G3/8	60	10	22 hexagon
DN15	32	39.6	27	G1/8	109	96	119	108	G1/2	65	11.5	25 hexagon
DN20	32	39.6	27	G1/8	112	100	126	115	G3/4	75	14	31 hexagon

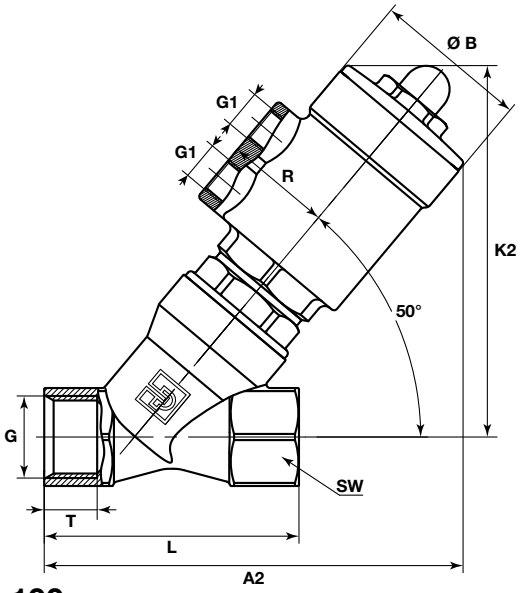

Stainless Steel Actuators Sizes 40, 50, 63, 80, 100 mm

Type	Actuator	D	R	P	K1	A1	G	L	T	SW
DN10	40	50.5	27	G1/8	116	121	G3/8	60	10	22 hexagon
	50	62	34	G1/8	130	133	G3/8	60	10	22 hexagon
DN15	40	50.5	27	G1/8	118	124	G1/2	65	11.5	25 hexagon
	50	62	34	G1/8	131	135	G1/2	65	11.5	25 hexagon
DN 20	50	62	34	G1/8	134	141	G3/4	75	14	31 hexagon
DN25	50	62	34	G1/8	141	153	G1	90	15	39 hexagon
	63	77	41.5	G1/8	164	175	G1	90	15	39 hexagon
DN32	63	77	41.5	G1/8	170	188	G1-1/4	110	18	50 octagon
	80	98	52	G1/4	184	205	G1-1/4	110	18	50 octagon
DN40	63	77	41.5	G1/8	181	201	G1-1/2	120	18	56 octagon
	80	98	52	G1/4	195	217	G1-1/2	120	18	56 octagon
	100	121	63	G1/4	213	235	G1-1/2	120	18	56 octagon
DN50	63	77	41.5	G1/8	189	216	G2	150	22	68 octagon
	80	98	52	G1/4	203	233	G2	150	22	68 octagon
	100	121	63	G1/4	221	250	G2	150	22	68 octagon
DN65	100	121	63	G1/4	248	285	G2-1/2	180	25	85 octagon

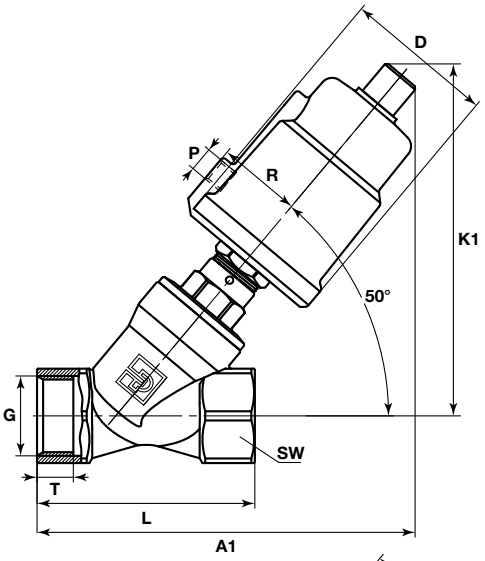

Aluminum Actuators Sizes 50, 63, 80, 100 mm

Type	Actuator	D	R	P	K1	A1	G	L	T	SW
DN10	50	61	38	G1/8	132	141	G3/8	60	10	22 hexagon
DN15	50	61	38	G1/8	133	144	G1/2	65	11.5	25 hexagon
DN20	50	61	38	G1/8	136	150	G3/4	75	14	31 hexagon
DN25	50	61	38	G1/8	144	162	G1	90	15	39 hexagon
	63	75	45	G1/8	167	183	G1	90	15	39 hexagon
DN32	63	75	45	G1/8	173	196	G1-1/4	110	18	50 octagon
	80	94	54	G1/4	192	214	G1-1/4	110	18	50 octagon
DN40	63	75	45	G1/8	184	209	G1-1/2	120	18	56 octagon
	80	94	54	G1/4	203	226	G1-1/2	120	18	56 octagon
	100	115	64	G1/4	223	245	G1-1/2	120	18	56 octagon
DN50	63	75	45	G1/8	192	224	G2	150	22	68 octagon
	80	94	54	G1/4	211	242	G2	150	22	68 octagon
	100	115	64	G1/4	231	260	G2	150	22	68 octagon
DN65	100	115	64	G1/4	257	294	G2-1/2	180	25	85 octagon

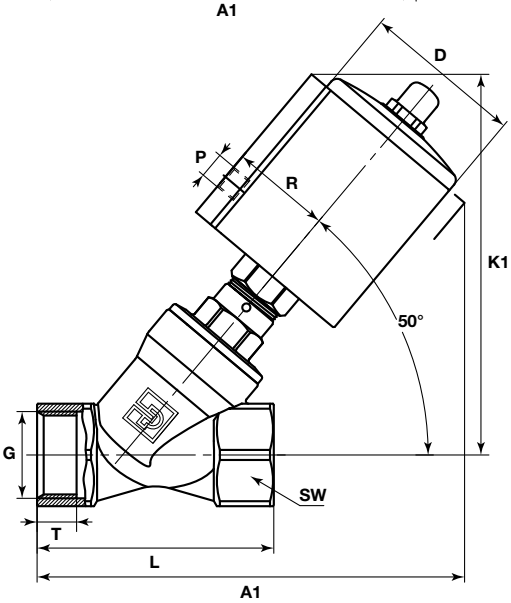

PA Series - 3 Way Direct Acting Pilot

Solenoid Valves for Controlling the Angle Seat Valves

Banjo Valves
G1/4" & G1/8" Series with Aluminium Body

Solenoid Operated B14-B04 Versions with 22 mm Coil

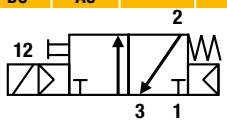

3/2 Solenoid operated - Spring return (monostable)

Port Size Banjo	Port Size G	Orifice mm	Q_N l/min	Admissible differential pressure (bar) max. min	DC=	AC~	Max. admissible fluid temperature (°C) Min. = - 10°C Air & Neutral gases	Seat disc	Reference number Valve	Housing	Coil	Consumption Power (Watt) DC	AC	Weight (g)	Dim. Ref.
1/8	1/8	1.2	50	0	10	10	50	NBR	131B14	-	496131	3	3	140	26
1/8	1/8	1.2	50	0	10	10	50	NBR	131B14	-	496482	3	3	150	26
1/8	1/8	1.2	50	0	10	10	50	NBR	131B14	-	496637	3	3	150	26
1/8	1/8	1.2	50	0	10	-	50	NBR	131B14	-	482605	5	-	170	26

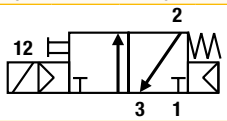

3/2 Solenoid operated - Spring return (monostable)

1/4	1/8	1.2	50	0	10	10	50	NBR	131B04	-	496131	3	3	160	27
1/4	1/8	1.2	50	0	10	10	50	NBR	131B04	-	496482	3	3	175	27
1/4	1/8	1.2	50	0	10	10	50	NBR	131B04	-	496637	3	3	175	27
1/4	1/8	1.2	50	0	10	-	50	NBR	131B04	-	482605	5	-	190	27

Dimensions Reference 26

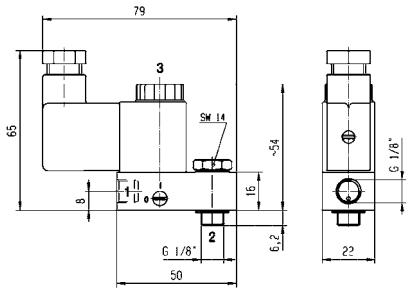

Dimensions Reference 27

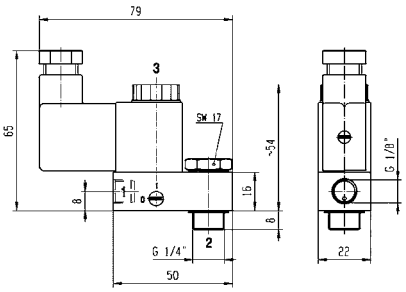

Banjo Valve Mounted to the valve

Coils 22 mm for Banjo Valves Series

These coils with connection for 2 P+G DIN 43650 B plug are encapsulated in synthetic material, conform to the IEC/CENELEC safety standards and comply with European low voltage directive 2006/95/EC. Banjo Valve bodies conform to the terms of the directive 94/9/CE specific to non electrical equipment for use within potentially explosive environments - Please select apropriate Coil for Safe Area or ATEX zones 1/21 or 2/22 in the following table.

- Power: 3 W or 5 W
- Insulation Class: F (155°C)
- Degree of Protection: IP65 (with plug)
- Duty Cycle: 100% ED

Available Voltages	Safe area without DIN plug Code	Safe area with DIN plug Code	For Zone 2/22 II 3 G-Ex nc AC IIC T5 II 3 D-Ex tc AC IIIC - T 95°C code with DIN plug	For Zone 1/21 II 2 G-Ex mb II T4 II 2 D-Ex tb IIIC - T 130°C code includes DIN plug and 1.5 m cable
12 VDC	496131 C1	496482 C1	496637 C1	482605 C1
24 VDC	496131 C2	496482 C2	496637 C2	482605 C2
48 VDC	496131 C4	496482 C4	496637 C4	-
110 VDC	496131 C5	496482 C5	496637 C5	-
24/50-60 VAC	496131 P0	496482 P0	496637 P0	-
48/50-60 VAC	496131 S4	496482 S4	496637 S4	-
110/50-60 VAC	496131 P2	496482 P2	496637 P2	-
115/60 VAC	496131 K8	496482 K8	496637 K8	-
230/50-60 VAC	496131 P9	496482 P9	496637 P9	-

Stainless Steel Air Preparation & Airline Accessories

Ball valves series

Ball valves MB Series
- One piece compact barstock design
- Center off position for 3-way
- 2-way, inline, angle; 3-way, 4-way and 5-way
- Standard drop-in replacement
- Patented seat design

Ball valves B Series
- 2-way, 3-way
- Wide temperature application range
- Widest variety of seats, seals and port connections

For more details refer to catalogue: 4121-BV

Diaphragm valve

Diaphragm Valve NOVA Series
- General purpose, high cycle, compact valve
- For regular outlet valve, gas control panels and analyser sampling system applications.
- Handwheel, lever and indicating handwheel options

For more details refer to catalogue: IPD 4515

Filter & Check valve

Filter FT series
- Filter elements are easily replaced without disconnecting the tube lines
- Fast Loop bypass option enables a continuous self cleaning flow

Check valves C series
- Resilient, custom molded, seat design
- Back stopped poppet to minimize spring stress
- Cracking Pressures: 0.02 to 7 bar
- Various port connections male and female BSP, NPT...

For more details refer to catalogue: IPD 4135-CV

Relief valve

Professional Relief valve 20XXG series
- Easy to adjust, precise setting variation
- Easy to install, minimum size
- Adjusting screw protected by user
- Highest repeatability of cracking pressure
- Minimized leakage preventing waste of media

For more details refer to catalogue: FCDE 5531UK

Quick-Acting Couplers

- Compact design
- Corrosion resistance
- Mainly used for applications in the areas of compressed air and liquids
- Optimally suited to use with liquid and aggressive media

For more details refer to catalogue: CAT/3800-Legris

FRLs

- Suitable for Marine & Offshore applications
- Chemical / Petroleum and process industries
- Coalescing filters are designed for removing oil and water aerosols down to 0.01µ
- Suitable for food industry applications

For more details refer to catalogue: PDE2504TCUK

Push-In Fittings

- Extreme chemical and mechanical resistance for severe conditions: food industry, chemicals, medical...
- Fittings suitable for permanent food contact
- Hygienic external design for reducing retention zones
- Proven gripping technology
- Manual connection and disconnection, no tools required
- 100 % leak-tested in production

For more details refer to catalogue: CAT/0570

Compression Fittings

- Excellent resistance to environmental conditions and corrosive fluids
- Pressure and temperature resistant
- Withstand strong vibration and water hammer

For more details refer to catalogue: CAT/0570

Coil Range for Stainless Steel Solenoid Valves

Table of Content

COILS

EXPLOSION PROOF ELECTRICAL PARTS

Coil Range

COIL GROUP

2.0/2.1

COILS FOR
DIN PLUG CONNECTION

COILS 32 mm

These coils can be mounted with every Parker solenoid valves corresponding to the specified Coil Group.
See column "Coil Group" within valve pages.
This is an encapsulated assembly comprising a coil, integral magnetic iron path and snap-on plug connection.

The synthetic material encapsulation provides an effective compact housing, offering full protection against dust, oil, water, etc.
Ease of mounting in confined space - offers shock and corrosion protection - simplifies conversion of existing equipment to other requirements, etc.
Coils conform to the IEC/CENELEC safety standards and complies with European low-voltage directive.

Specification			Standard			Double frequency	
Ref. (without DIN plug) Ref. (with DIN plug)			481865 482725			483510 482635	
Coil Group			2.0 / 2.1				
Degree of protection			**IP65** according to IEC / EN 60529 standards (with DIN plug).				
Class of insulation			F 155°C				
Electrical connection			The coil is connected with a 2 P + E plug according to EN 175301-803 type A				
Ambient temperature			-40°C to +50°C The application is limited also by the temperature range of the valve.				
Elect. Power	DC	**Pn** (hot)	9 W			-	
		P (cold) 20°C	12 W			-	
	AC	**Pn** (holding)	8 W			9 W	
		Attraction cold	26 VA (9 W)			32 VA (10 W)	
Weight			130 g (without plug)				
Voltages "Un"			VAC/Hz	Code	VDC	Code	VAC/Hz	Code
-10% to +10% of the Un			24/50 48/50 110/50 220-230/50 230/60	A2 A4 A5 3D J3	12 24 48 110	C1 C2 C4 C5	24/50, 24/60 48/50, 48/60 110-115/50, 120/60 220-240/50, 240/60	P0 S4 S5 S6

To Order a Coil choose Coil Ref + Voltage Code, example: 481865 for 24 VDC = 481865C2
More voltage possibilities can be found in the table of voltage codes at the end of the coil section.

These coils must be used with suitable housings, see example below:

The coil assembly kit **Ref. 2995** corresponds to the "housing" of Lucifer® valve numbering system (Valve - housing - coil/voltage).

It is composed of a nameplate giving details of the valve type, a round washer and a nut to ensure the fixing between 32 mm coil and the valve.

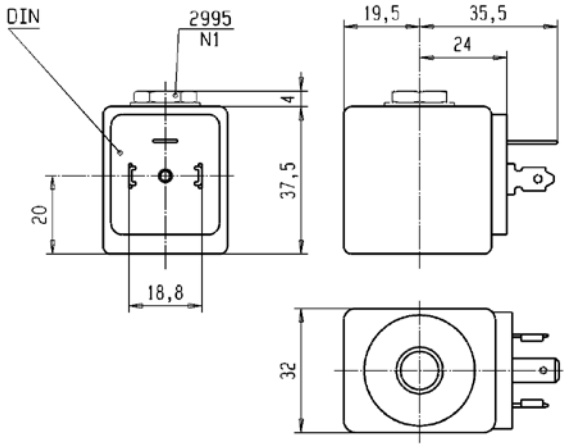

Coil Range

COIL GROUP
2.0/2.1
2.2

COILS FOR
DIN PLUG CONNECTION

HIGH TEMPERATURE COILS 32 mm

These coils can be mounted with every Parker solenoid valves corresponding to the specified Coil Group.
See column "Coil Group" within valve pages.
This is an encapsulated assembly comprising a coil, integral magnetic iron path and snap-on plug connection.

The synthetic material encapsulation provides an effective compact housing, offering full protection against dust, oil, water, etc.
Ease of mounting in confined space - offers shock and corrosion protection - simplifies conversion of existing equipment to other requirements, etc.
Coils conform to the IEC/CENELEC safety standards and complies with European low-voltage directive.

Specification			High temperature				High temp. + high power			
Ref. (without DIN plug) Ref. (with DIN plug)			492453 492726				492425 492727			
Coil Group			2.0 / 2.1				2.0 / 2.2			
Degree of protection			**IP65** according to IEC / EN 60529 standards (with DIN plug).							
Class of insulation			H 180°C							
Electrical connection			The coil is connected with a 2 P + E plug according to EN 175301-803 type A							
Ambient temperature			-40°C to +50°C The application is limited also by the temperature range of the valve.							
Elect. Power	DC	**Pn** (hot)	9 W				14 W			
		P (cold) 20°C	12 W				21 W			
	AC	**Pn** (holding)	8 W				14 W			
		Attraction cold	26 VA (9 W)				55 VA (18 W)			
Weight			130 g (without plug)							
Voltages "Un" -10% to +10% of the Un			VAC/Hz	Code	VDC	Code	VAC/Hz	Code	VDC	Code
			24/50 48/50 110/50 220/50-230/50	A2 A4 A5 3D	12 24 48 110	C1 C2 C4 C5	24/50 110/50 230/50	A2 A5 F4	24	C2

To Order a Coil choose Coil Ref + Voltage Code, example: 492453 for 24VDC= 492453C2
More voltage possibilities can be found in the table of voltage codes at the end of the coil section.

These coils must be used with suitable housings, see example below:

The coil assembly kit **Ref. 2995** corresponds to the "housing" of Lucifer® valve numbering system (Valve - housing - coil/voltage).

It is composed of a nameplate giving details of the valve type, a round washer and a nut to ensure the fixing between 32 mm coil and the valve.

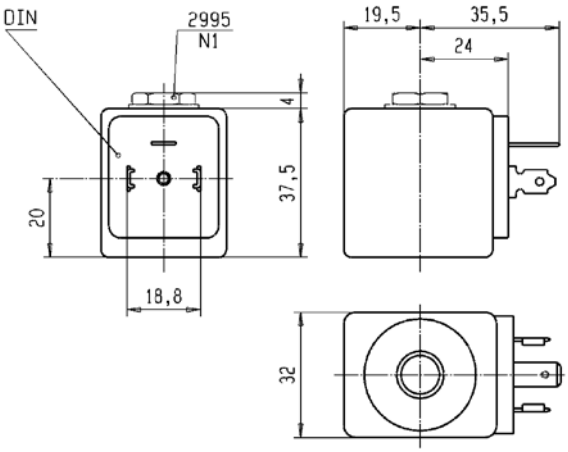

Coil Range

COIL GROUP

6.0

COILS FOR
DIN PLUG CONNECTION

LOW POWER COIL 32 mm

These coils can be mounted with every Parker solenoid valves corresponding to the specified Coil Group.
See column "Coil Group" within valve pages.
This is an encapsulated assembly comprising a coil, integral magnetic iron path and snap-on plug connection.

The synthetic material encapsulation provides an effective compact housing, offering full protection against dust, oil, water, etc.
Ease of mounting in confined space - offers shock and corrosion protection - simplifies conversion of existing equipment to other requirements, etc.
Coils conform to the IEC/CENELEC safety standards and complies with European low-voltage directive.

Specification			Miniwatt	
Reference (without DIN plug) Reference (with DIN plug)			482740 482745	
Coil Group			6.0	
Degree of protection			**IP65** according to IEC / EN 60529 standards (with DIN plug).	
Class of insulation			F 155°C	
Electrical connection			The coil is connected with a 2 P + E plug according to EN 175301-803 type A	
Ambient temperature			-40°C to +50°C The application is limited also by the temperature range of the valve.	
Elect. Power	DC	**Pn** (hot)	1.6 W	
		P (cold) 20°C	2.1 W	
	AC	**Pn** (holding)	-	
		Attraction cold	-	
Weight			130 g (without plug)	
Voltages "Un" -10% to +10% of the Un			VDC	Code
			24	C2
			48	C4
			110	C5

To Order a Coil choose Coil Ref + Voltage Code, example: 482740 for 24 VDC = 482740C2
More voltage possibilities can be found in the table of voltage codes at the end of the coil section.

These coils must be used with suitable housings, see example below:

The coil assembly kit **Ref. 2995** corresponds to the "housing" of Lucifer® valve numbering system (Valve - housing - coil/voltage).

It is composed of a nameplate giving details of the valve type, a round washer and a nut to ensure the fixing between 32 mm coil and the valve.

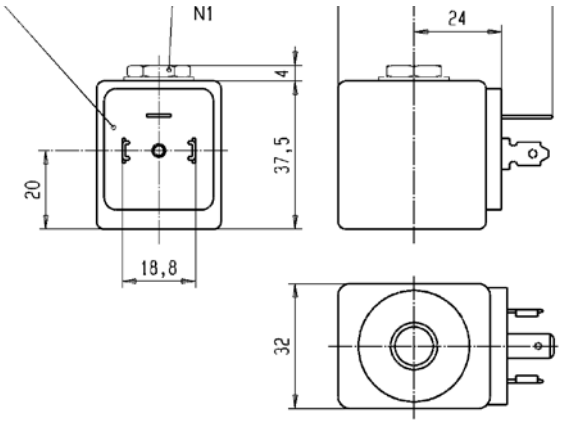

Coil Range

COIL GROUP

24.0

COILS FOR
DIN PLUG CONNECTION

D5 COIL SERIES 32 mm

Encapsulated in synthetic material, Connector for 2P+E according with DIN EN 175301-803, Form A, IP65 degree of protection to be considered with connector plug only.

This coil conforms to the IEC/CENELEC safety standards and complies with European low-voltage directive.
DIN plug connector to be ordered separately (see coil accessories section).

Specification			Mono Frequency VDE Coil			
Reference (without DIN plug)			D5 Series			
Coil group			24.0			
Degree of protection			**IP65** according to IEC / EN 60529 standards (with DIN plug)			
Class of insulation			F 155°C			
Electrical connection			The coil is connected with a 2 P + E plug according to EN 175301-803 type A.			
Ambient temperature			-40°C to +50°C The application is limited also by the temperature range of the valve.			
Elect. Power	DC	**Pn** (hot)	9 W			
		P (cold) 20°C	-			
	AC	**P** (cold) 20°C	8 W			
		Attraction cold	26 VA			
Weight			130 g			
Voltages "Un"			VAC/Hz	Code	VDC	Code
-10% to +10% of Un for AC - 5 % to + 10 % for Un DC.			24/50 110/50 220-230/50 24/60 230/60 115/60	D5H D5XA5 D5L D5E D5XJ3 D5XK8	24	D5B

To Order a Coil: Use 6 digits ordering number **- example:** D5 for 24 VAC/60 Hz **= D5E**
More voltage possibilities can be found in the table of voltage codes at the end of the coil section.

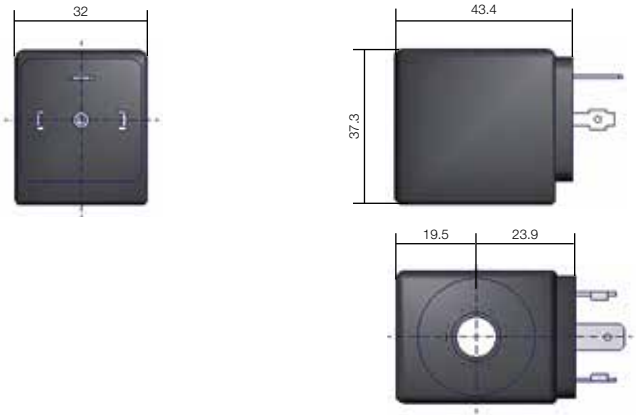

Coil Range

COIL GROUP

24.0

COILS FOR
DIN PLUG CONNECTION

HIGH TEMPERATURE COILS 32 mm

These coils can be mounted with any Parker solenoid valves whereas specified Coil Group is indicated.
See column "Coil Group" within valve pages.

The synthetic material encapsulation provides an effective compact housing, offering full protection against dust, oil, water, etc.

Ease of mounting in confined space - offers shock and corrosion protection - simplifies conversion of existing equipment to other requirements, etc.

Coils conform to the IEC/CENELEC safety standards and complies with 2006/95/EC European low-voltage directive.

Specification			High temp. + high power			
Ref. (without DIN plug)			DM			
Coil Group			24			
Degree of protection			**IP65** according to IEC / EN 60529 standards (with DIN plug).			
Class of insulation			H 180°C			
Electrical connection			The coil is connected with a 2 P + E plug according to EN 175301-803 type A			
Ambient temperature			-40°C to +50°C The application is limited also by the temperature range of the valve.			
Elect. Power	DC	**Pn** (hot)	14 W			
		P (cold) 20°C	21 W			
	AC	**Pn** (holding)	14 W			
		Attraction cold	55 VA (18 W)			
Weight			130 g (without plug)			
Voltages "Un"			VAC/Hz	Code	VDC	Code
-10% to +10% of the Un			24/50 110/50 230/50	H J K	24	B

To Order a Coil : Use coil reference DM and add Voltage Code, example: DM for 24VDC= **DMB**

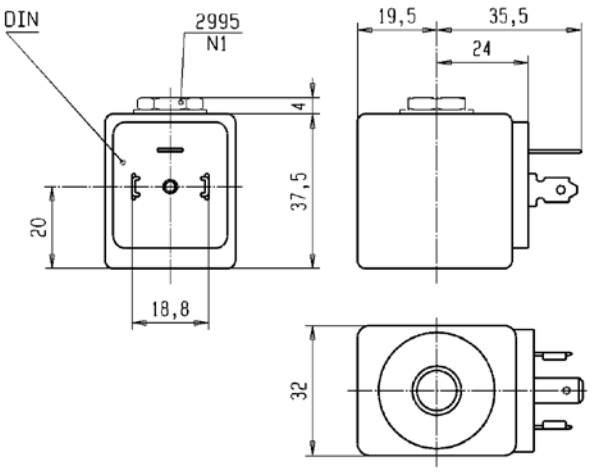

Coil Range

COIL GROUP

10.1

COILS FOR
DIN PLUG CONNECTION

COIL FOR OIL AND GAS 37 mm

This coil can be mounted with every Parker solenoid valves corresponding to the specified Coil Group.
See column "Coil Group" within valve pages.
This is an encapsulated assembly comprising a coil, integral magnetic iron path and snap-on plug connection.

The synthetic material encapsulation provides an effective compact housing, offering full protection against dust, oil, water, etc.
Ease of mounting in confined space - offers shock and corrosion protection - simplifies conversion of existing equipment to other requirements, etc.
Coils conform to the IEC/CENELEC safety standards and complies with European low-voltage directive. DIN plug connector included.

Specification			Coil for Oil and Gas			
Reference (with DIN plug)			496895			
Coil group			10.1			
Degree of protection			**IP65** according to IEC / EN 60529 standards			
Class of insulation			H 180°C			
Electrical connection			With DIN plug 492459 (AC) or 486586 (DC)			
Ambient temperature			-40°C to +50°C The application is limited also by the temperature range of the valve.			
Elect. Power	DC	**Pn** (hot)	8 W			
		P (cold) 20°C	-			
	AC	**Pn** (holding)	8 W			
		Attraction cold	-			
Weight			273 g			
Voltages "Un"			VAC/Hz	Code	VDC	Code
-10% to +10% of the Un			230/50-60	P9	24	C2
			110/50-60	P2	48	C4
			24/50-60	P0	110	C5
			48/50-60	S4		

To Order a Coil choose Coil Ref + Voltage Code, example: 496895 for 24VDC = 496895C2
More voltage possibilities can be found in the table of voltage codes at the end of the coil section.
The fixing nut (housing kit) is already inclued in the coil kit.

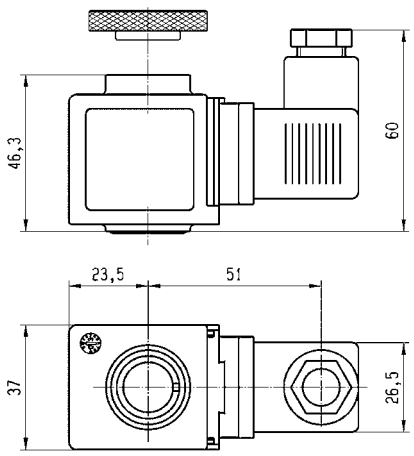

Coil Range

COIL GROUP

2.0/2.1

COILS WITH
SCREW TERMINALS

STANDARD COILS 40 mm

These coils can be mounted with every Parker Solenoid Valves corresponding to the specified Coil Group.

See column "Coil Group" within valve pages. They can be mounted with all metal housings.

The coil winding is completely encapsulated in synthetic material.

Easy mounting in confined spaces. Electrical connection with screw terminals for wire up to 1.5 mm².

Coils conform to the IEC/CENELEC safety standards and complies with European low-voltage directive.

Specification			Standard				Double Frequency	
Reference			481000				483520	
Coil Group			2.0 / 2.1					
Class of insulation			F 155°C					
Ambient temperature			-40°C to +50°C The application is limited also by the temperature range of the valve..					
Elect. Power	DC	Pn (hot)	8W				-	
		P (cold) 20°C	9W				-	
	AC	Pn (holding)	8W				9W	
		Attraction cold	32 VA (9 W)				36 VA (10 W)	
Weight			130 g				130 g	
Voltages "Un"			VAC/Hz	Code	VDC	Code	VAC/Hz	Code
-10% to +10% of the Un (-15 % to +5 % for double-frequency coil with voltage code S6 if 240 V/50/Hz is used).			24/50 48/50 110/50-115/50 220/50-230/50	A2 A4 0A 3D	24 48 110	C2 C4 C5	24/50-60 220-240/50-240/60	P0 S6

To Order a Coil choose Coil Ref + Voltage Code, example: 4828 for 24 VDC = 481000C2
More voltage possibilities can be found in the table of voltage codes at the end of the coil section.

These coils must be used with suitable housings, see examples below:

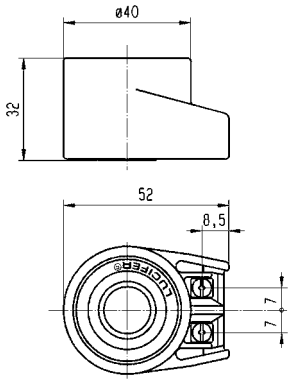

Ref. 4270 - Protection **IP 44** according to IEC / EN 60529 standard (with cable gland)

Ref. 4538 - Protection **IP 67** according to IEC / EN 60529 standard

Coil Range

COIL GROUP

1.1

COILS FOR
DIN PLUG CONNECTION

COILS 22 mm

These coils can be mounted with any Parker solenoid valves corresponding to the specified Coil Group. See column "Coil Group" within valve pages.

This coil is designed for valves equipped with a miniature tube assembly (2000 series valves). This is an encapsulated assembly comprising a coil, integral magnetic iron path and snap-on plug connection.

The synthetic material encapsulation provides an effective compact housing, offering full protection against dust, oil, water, etc.

Ease of mounting in confined space - offers shock and corrosion protection - simplifies conversion of existing equipment to other requirements, etc.

Coil conforms to the IEC/CENELEC safety standards and complies with 2006/95/EC European low-voltage directive.

Specification			Low power				High power			
Ref. (without DIN plug)			DF				DG			
Coil Group			1.1							
Degree of protection			**IP65** according to IEC / EN 60529 standards (with DIN plug).							
Class of insulation			F 155°C							
Electrical connection			The coil is connected with a 2 P + E plug according to EN 175301-803 type B.							
Ambient temperature			-40°C to +50°C The application is limited also by the temperature range of the valve.							
Elect. Power	DC	**Pn** (hot)	2.5 W				5 W			
		P (cold) 20°C	3 W				6.5 W			
	AC	**Pn** (holding)	2 W				4 W			
		Attraction cold	5.7 VA (2.5 W)				8.9 VA (5 W)			
Weight			100 g with DIN Plug							
Voltages "Un"			VAC/Hz	Code	VDC	Code	VAC/Hz	Code	VDC	Code
-10% to +10% of the Un			24/50 220-230/50 110/50-115/50	H L J	24	B	24/50 110/50-115/50 220/50-230/50	H J L	24	B

To Order a Coil choose Coil Ref + Voltage Code, example: DG for 24VDC = DGB

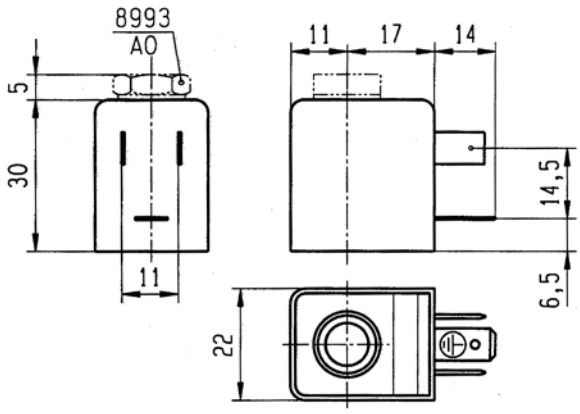

Coil Range

ZONE 2/22

COIL GROUP

2.0/2.1

EXPLOSION PROOF ELECTRICAL PARTS

NON SPARKING PROTECTION ELECTRICAL PARTS "**nAc nCc**"

ELECTRICAL PART 32 mm

These coils can be mounted with every Parker ATEX solenoid valves corresponding to the specified Coil Group.
See column "Coil Group" within valve pages.

Application: Control of solenoid valves in dangerous areas where explosion-proof protection Ex nAc nCc IIC T3/T4 is required.
Ease of mounting in confined space - offers shock and corrosion protection-simplifies conversion of existing equipment to other requirements, etc.

Benefits:
The synthetic material encapsulation of the coil provides an effective compact housing, offering full protection against dust, oil, water, etc.
Small size for ease of mounting in confined spaces.

Reference			495870				496110	
Certificate			LCIE 05 ATEX 6003 X					
Coil Group			2.0 / 2.1					
Type of protection		Gas	II 3 G Ex nAc nCc IIC T3/T4				II 3 G Ex nAc nCc IIC T3/T4	
		Dust	II 3 D - Ex tc IIIC - T195°C / T130°C				II 3 D - Ex tc IIIC - T195°C / T130°C	
Degree of protection			**IP65** (with plug) according to IEC/EN 60529 Standards					
Insulation Class			F (155°C)					
Duty cycle			100%					
Ambiant temperature			-40°C to +65°C / 50°C The application is limited also by the temperature range of the valve.					
Elect. Power	DC	**Pn** (hot)	9 W				-	
		P (cold) 20°C	12 W				-	
	AC	**Pn** (holding)	8 W				9 W	
		Attraction cold	26 VA (9 W)				32 VA (10 W)	
Weight			150 g					
Voltages "Un" -10% to +10% of the Un			VAC/Hz	Code	VDC	Code	VAC/Hz	Code
			24/50	A2	24	C2	24/50-60	P0
			48/50	A4	48	C4	48/50-60	S4
			110/50	A5	110	C5	110/50-60	S5
			220-230/50	3D			220/50-60	S6

To Order a Coil choose Coil Ref + Voltage Code, example: 495870 for 24 VDC = 495870C2

These coils must be used with suitable housings, see example below:

The coil assembly kit **Ref. 2995** corresponds to the "housing" of Lucifer® valve numbering system (Valve - housing - coil/voltage).

It is composed of a nameplate giving details of the valve type, a round washer and a nut to ensure the fixing between 32 mm coil and the valve.

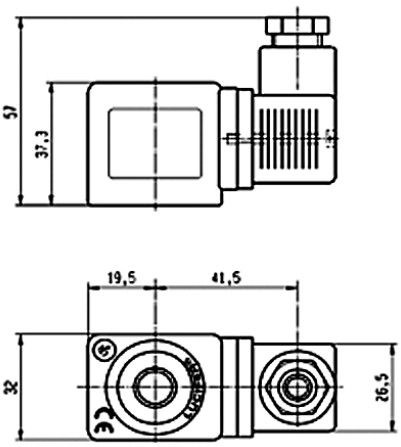

Coil Range

COIL GROUP

6.0

EXPLOSION PROOF ELECTRICAL PARTS

NON SPARKING PROTECTION
ELECTRICAL PARTS "**nAc nCc**"

ZONE 2/22

ELECTRICAL PART LOW POWER 32 mm

This coil can be mounted with every Parker ATEX solenoid valves corresponding to the specified Coil Group.
See column "Coil Group" within valve pages.

Application: Control of solenoid valves in dangerous areas where explosion-proof protection Ex nAc nCc IIC T5/T6 is required.
Ease of mounting in confined space - offers shock and corrosion protection-simplifies conversion of existing equipment to other requirements, etc.

Benefits:
The synthetic material encapsulation of the coil provides an effective compact housing, offering full protection against dust, oil, water, etc.
Small size for ease of mounting in confined spaces.

Reference			**496125**	
Certificate			**LCIE 05 ATEX 6003 X**	
Coil group			**6.0**	
Type of protection	**Gas**		II 3 G Ex nAc nCc IIC T5/T6	
	Dust		II 3 D Ex tc IIIC T95°C/80°C	
Degree of protection			**IP65** (with plug) according to IEC/EN 60529 Standards	
Insulation Class			F (155°C)	
Duty cycle			100%	
Ambiant temperature			-40°C to +65°C / 50°C The application is limited also by the temperature range of the valve.	
Elect. Power	**DC**	**Pn** (hot)	1.6 W	
		P (cold) 20°C	2.1 W	
	AC	**Pn** (holding)	-	
		Attraction cold	-	
Weight			150 g	
Voltages "Un"			**VDC**	**Code**
-10% to +10% of the Un			24	C2
			48	C4
			110	C5

To Order a Coil choose Coil Ref + Voltage Code, example: 496125 for 24 VDC = 496125C2

These coils must be used with suitable housings, see example below:

The coil assembly kit **Ref. 2995** corresponds to the "housing" of Lucifer® valve numbering system (Valve - housing - coil/voltage).

It is composed of a nameplate giving details of the valve type, a round washer and a nut to ensure the fixing between 32 mm coil and the valve.

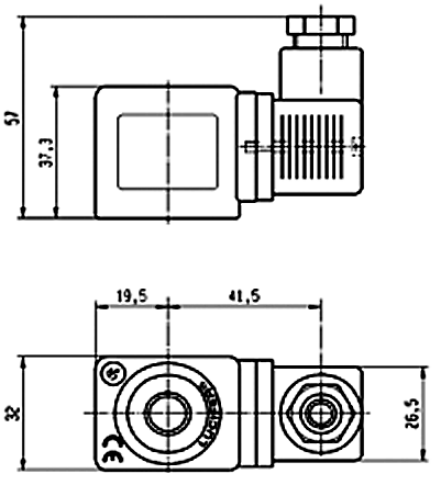

Coil Range

ZONE 2/22

COIL GROUP

1.2

EXPLOSION PROOF ELECTRICAL PARTS

NON SPARKING PROTECTION ELECTRICAL PARTS "**nAc nCc**"

ELECTRICAL PART DOUBLE FREQUENCY 22 mm

This coil can be mounted with every Parker ATEX solenoid valves corresponding to the specified Coil Group.

See column "Coil Group" within valve pages.

Application:
Control of solenoid valves in dangerous areas where explosion-proof protection Ex nAc nCc IIC T5 is required.

Benefits:
The synthetic material encapsulation of the coil provides an effective compact housing, offering full protection against dust, oil, water, etc.
Small size for ease of mounting in confined spaces.

Specification			Double Frequency			
Reference			496637			
Certificate			ATEX			
Coil group			1.2			
Type of protection		Gas	Ex nAc nCc IIC T5			
		Dust	II 3 D - Ex tc IIIC - T 95°C			
Degree of protection			**IP65** (with plug) according to IEC/EN 60529 Sandards			
Ambiant temperature			-20°C to +50°C The application is limited also by the temperature range of the valve.			
Insulation Class			F 155°C			
Elect. Power	DC	**Pn** (hot)	3 W			
		P (cold) 20°C	-			
	AC	**Pn** (holding)	3 W			
		Attraction cold	5.7 VA (2.5 W)			
Weight			75 g			
Voltages "Un" -10% to +10% of the Un			VAC/Hz	Code	VDC	Code
			24/50-60	P0	24 V	C2
			110/50-60	P2	48 V	C4
			230/50-60	P9	110 V	C5
			48/50-60	S4		

To Order a Coil choose Coil Ref + Voltage Code, example: 496637 for 24 VDC = 496637C2

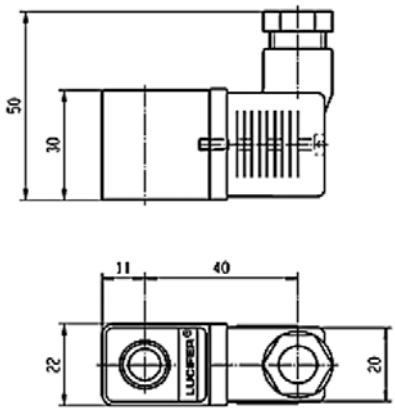

Coil Range

COIL GROUP

2.0/2.1

EXPLOSION PROOF ELECTRICAL PARTS

FLAME PROOF ENCAPSULATED ELECTRICAL PARTS "**db mb**"

ZONE 1/21

495905 - ELECTRICAL PARTS 37 mm

These coils can be mounted with every Parker ATEX solenoid valves corresponding to the specified Coil Group.

See column "Coil Group" within valve pages.

Application: Control of solenoid valves in dangerous areas where explosion-proof protection Ex db mb IIC T4 is required.

Benefits: Rotatable 360° fibreglass-reinforced plastic housing (class H). Solenoid coil, rectifier (silicium diodes), fuses and varistor protection are completely encapsulated into the coil housing by epoxy resin for shock and corrosion protection. The plastic housing is delivered with M20 x 1.5 cable gland certified for use "db" protection. Small size for ease of mounting in confined space.

Reference			495905		49590505*	
Certificate			LCIE 03 ATEX 6451 X - IECEx LCI 06.0004 X			
Coil Group			2.0 / 2.1			
Type of protection	Gas		II 2 G - Ex db mb IIC T4			
	Dust		II 2 D - Ex tb IIIC - 130°C			
Degree of protection			**IP67** according to IEC/EN 60529 Standards			
Ambient temperature			-40°C to +80°C The application is limited also by the temperature range of the valve.			
Class of insulation			H (180 °)			
Electrical connection			Electric connection is done in the connection box on an easily accessible connector terminals. The introduction of the cable (Ø min 5 mm, Ømax. 11 mm, section max. 2.5 mm²) in the connection box passes by the built in M20 x 1.5 cable gland.			
Elect. Power	DC	Pn (hot)	8 W			
		P (cold) 20°C	9 W			
	AC	Pn (holding)	8 W			
		Attraction cold	9 W			
Voltages "Un" -10% to +10% of Un for AC -10% to +10% for Un DC			VAC/Hz	Code	VDC	Code
			24/50	A2	24	C2
			48/50	A4	48	C4
			115/50	E5	110	C5
			230/50	F4		

To Order a Coil choose Coil Ref + Voltage Code, example: 495905 for 24 VDC = 495905C2

* 49590505 available only in C4

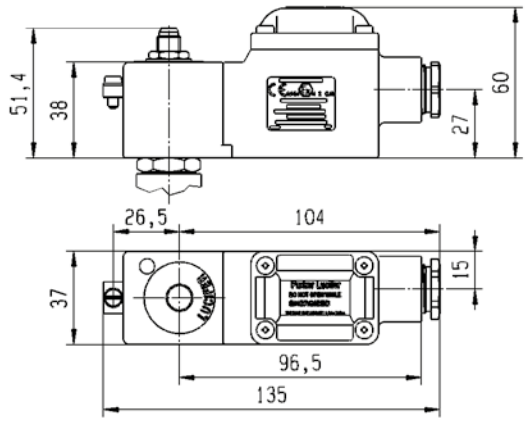

495905

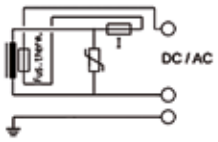

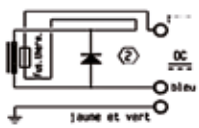

Coil Range

ZONE 1/21

COIL GROUP

6.0

EXPLOSION PROOF ELECTRICAL PARTS

FLAME PROOF ENCAPSULATED ELECTRICAL PARTS "**db mb**"

495900 - LOW POWER ELECTRICAL PARTS 37 mm

This coil can be mounted with every Parker ATEX solenoid valves corresponding to the specified Coil Group.
See column "Coil Group" within valve pages.

Application: Control of solenoid valves in dangerous areas where explosion-proof protection Ex db mb IIC T4 to T6 is required.

Benefits: Rotatable 360° fibreglass-reinforced plastic housing (class H). Solenoid coil, rectifier (silicium diodes), fuses and varistor protection are completely encapsulated into the coil housing by epoxy resin for shock and corrosion protection.
The plastic housing is delivered with M20 x 1.5 cable gland certified for use "db" protection. Small size for ease of mounting in confined space.

Reference			495900 (VAC)		495900 (VDC)	
Certificate			LCIE 03 ATEX 6451 X - IECEx LCI 06.0004 X			
Coil Group			6.0			
Type of protection	Gas		II 2 G - Ex db mb IIC T4 / T5 / T6		II 2 G - Ex db mb IIC T4 / T5 / T6	
	Dust		II 2 D Ex tb IIIC - 130°C / 95°C / 80°C		II 2 D Ex tb IIIC - T130°C / 95°C / 80°C	
Degree of protection			**IP67** according to IEC/EN 60529 Standards			
Ambient temperature			-40°C to +80°C / 55°C / 40°C		-40°C to +80°C / 65°C / 55°C	
			The application is limited also by the temperature range of the valve.			
Class of insulation			H (180 °)			
Electrical connection			Electric connection is done in the connection box on an easily accessible connector terminals. The introduction of the cable (Ø min 5 mm, Ømax. 11 mm, section max. 2.5 mm²) in the connection box passes by the built in M20 x 1.5 cable gland			
Elect. Power	DC	**Pn** (hot)	-		2 W	
		P (cold) 20°C	-		2.5 W	
	AC	**Pn** (holding)	2.5 W		-	
		Attraction cold	3 W		-	
Voltages "Un"			VAC/Hz	Code	VDC	Code
-10% to +10% of Un for AC			24/50	A2	24	C2
- 10 % to + 10 % for Un DC.			48/50	A4	48	C4
			115/50	E5	110	C5
			230/50	F4		

To Order a Coil: Coil Ref + Voltage Code, example: 495900 for 24 VDC = **495900C2**

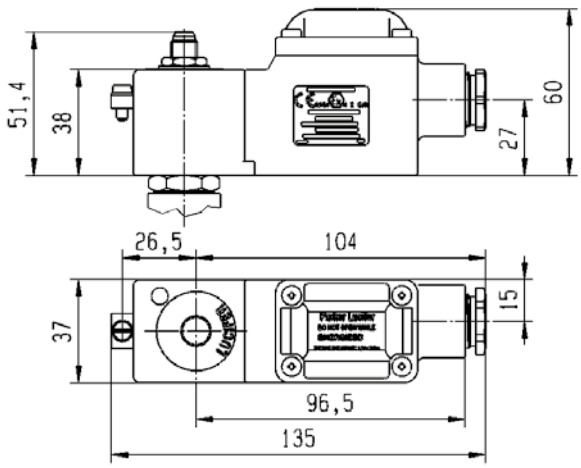

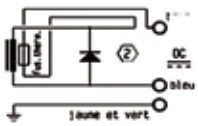

Coil Range

COIL GROUP

10.1/10.2

EXPLOSION PROOF ELECTRICAL PARTS

FLAME PROOF ENCAPSULATED ELECTRICAL PARTS "**db mb**"

ZONE 1/21

496700 & 496800 - ELECTRICAL PARTS 37 mm

These coils can be mounted with every Parker ATEX solenoid valves corresponding to the specified Coil Group.
See column "Coil Group" within valve pages.

Application: Control of solenoid valves in dangerous areas where explosion-proof protection Ex db mb IIC T4 to T6 is required.

Benefits: Rotatable 360° fibreglass-reinforced plastic housing (class H). Solenoid coil, rectifier (silicium diodes), fuses and varistor protection are completely encapsulated into the coil housing by epoxy resin for shock and corrosion protection. The plastic housing is delivered with 1/2" NPT or M20 x 1.5 threaded hole for wide range of cable glands. Small size for ease of mounting in confined space.

Reference			496700 or 496700.02 (NPT)				496800 or 49680002 (NPT)			
Certificate			LCIE 10 ATEX 3059 X - IECEx LCI 10.0023X							
Coil Group			10.2				10.1			
Type of protection	Gas		II 2 G - Ex db mb IIC T4 / T5 / T6				II 2 G - Ex db mb IIC T4			
	Dust		II 2 D - Ex tb IIIC - T130 / 95 / 80°C				II 2 D - Ex tb IIIC - T130°C			
Degree of protection			**IP67** according to IEC/EN 60529 Standards							
Ambiant temperature			-40°C to +35°C / +50°C / +65°C The application is limited also by the temperature range of the valve.				-40°C to +65°C			
Class of insulation			H (180°)							
Electrical connection			Electric connection is done in the connection box passes through a 1/2 NPT or M20x1.5 thread in which a certified Ex dBIIC cable gland must be installed							
Elect. Power	DC	**Pn** (hot)	-		6 W		-		8 W	
		P (cold) 20°C	-		7.5 W		-		10.5 W	
	AC	**Pn** (holding)	6 W		-		8 W		-	
		Attraction cold	7.5 W		-		10.5 W		-	
Voltages "Un"			VAC/Hz	Code	VDC	Code	VAC/Hz	Code	VDC	Code
-10% to +10% of the Un			230/50-60	P9	24	C2	230/50-60	P9	24	C2
			110/50-60	P2	48	C4	110/50-60	P2	48	C4
			24/50-60	P0	110	C5	24/50-60	P0	110	C5
			48/50-60	S4			48/50-60	S4		

To Order a Coil choose Coil Ref + Voltage Code, example: 496700 for 24 VDC = 496700C2

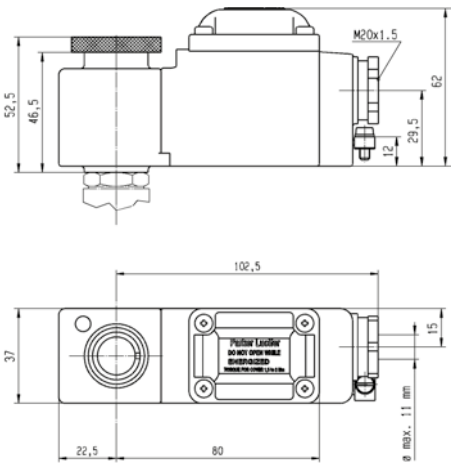

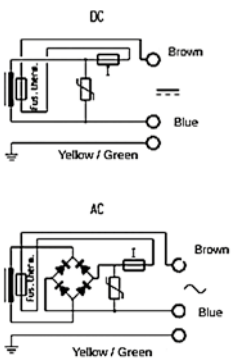

Coil Range

ZONE 1/21

COIL GROUP

10.2/10.1

EXPLOSION PROOF ELECTRICAL PARTS

FLAME PROOF ENCAPSULATED ELECTRICAL PARTS "**db mb**"

496555 & 496560 - ELECTRICAL PARTS 37 mm

These coils can be mounted with every Parker ATEX solenoid valves corresponding to the specified Coil Group.
See column "Coil Group" within valve pages.

Application: Control of solenoid valves in dangerous areas where explosion-proof protection Ex db mb IIC T4 to T6 is required.

Benefits: Rotatable 360° fibreglass-reinforced plastic housing (class H). Solenoid coil, rectifier (silicium diodes), fuses and varistor protection are completely encapsulated into the coil housing by epoxy resin for shock and corrosion protection. The plastic housing is delivered with M20 x 1.5 cable gland certified for use "db" protection. Small size for ease of mounting in confined space.

Reference			496555				496560			
Certificate			LCIE 07 ATEX 6075 X - IECEx LCI 07.0014X							
Coil Group			10.2				10.1			
Type of protection		Gas	II 2 G - Ex db mb IIC T4 / T5 / T6				II 2 G - Ex db mb IIC T4			
		Dust	II 2 D - Ex tb IIIC - T130°C / 95°C / 80°C				II 2 D - Ex tb IIIC - T130°C			
Degree of protection			**IP 67** according to IEC/EN 60529 Standards							
Ambiant temperature			-40°C to +65 / 50 / 35°C The application is limited also by the temperature range of the valve.				-40°C to +65°C			
Class of insulation			H (180 °)							
Electrical connection			Electric connection is done in the connection box on an easily accessible connector terminals. The introduction of the cable (Ø min 5 mm, Ømax. 11 mm, section max. 2.5 mm²) in the connection box passes by the built in M20 x 1.5 cable gland.							
Elect. Power	DC	**Pn** (hot)	-		6 W		-		8 W	
		P (cold) 20°C	-		7.5 W		-		10.5 W	
	AC	**Pn** (holding)	6 W		-		8 W		-	
		Attraction cold	7.5 W		-		10.5 W		-	
Voltages "Un"			VAC/Hz	Code	VDC	Code	VAC/Hz	Code	VDC	Code
-10% to +10% of the Un			230/50-60	P9	24	C2	230/50-60	P9	24	C2
			110/50-60	P2	48	C4	110/50-60	P2	48	C4
			24/50-60	P0	110	C5	24/50-60	P0	110	C5
			48/50-60	S4			48/50-60	S4		

To Order a Coil choose Coil Ref + Voltage Code, example: 496555 for 24 VDC = 496555C2

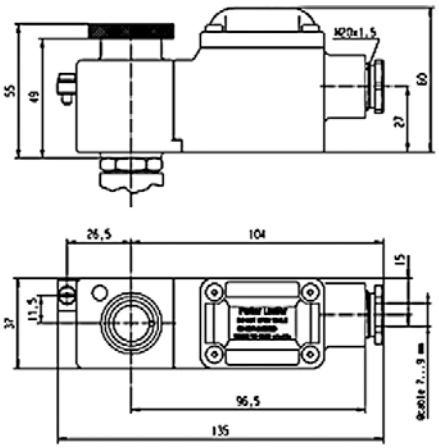

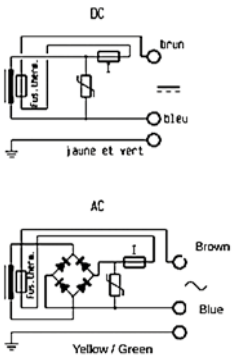

Coil Range

COIL GROUP

2.0/2.1

EXPLOSION PROOF ELECTRICAL PARTS

ENCAPSULATED
ELECTRICAL PARTS "**mb**"

ZONE 1/21

WITH WATER PROOF METAL HOUSING 50 mm

These coils can be mounted with every Parker ATEX solenoid valves corresponding to the specified Coil Group.

See column "Coil Group" within valve pages.

Application: Control of solenoid valves in dangerous areas where explosion-proof protection Ex mb IIC T4/ T5 is required.

Benefits: Epoxy-vernished steel housing - solenoid coil, rectifier (silicium diodes), fuse and varistor protection element are completely encapsulated in the coil housing by means of epoxy resin.Small size for ease of mounting in confined space. Simplifies conversion of existing equipment to hazardous area requirements.

Reference			**492070 (with 3 m cable length)** **492070160 (with 6 m cable length)**			
Certificate			**LCIE 02 ATEX 6017 X - IECEx LCI 09.0024 X**			
Coil Group			**2.0 / 2.1**			
Type of protection	**Gas**		II 2 G - Ex mb IIC T4/ T5			
	Dust		II 2 D - Ex tb IIIC - T130 / 95°C			
Degree of protection			**IP67** according to IEC/EN 60529 standards			
Ambient temperature			-40°C to +65°C / 40°C The application is limited also by the temperature range of the valve.			
Insulation Class			F 155°C			
Electrical connection			Cable connection (3 x 1.5 mm²) with cable gland M20 x 1.5, external earth screw connection.			
Elect. Power	**DC**	**Pn** (hot)	8 W			
		P (cold) 20°C	10 W			
	AC	**Pn** (holding)	9 W			
		Attraction cold	11 W			
Weight			500 g			
Voltages "Un" -10% to +10% of the Un			**VAC/Hz**	**Code**	**VDC**	**Code**
			24/50-60	P0	24	C2
			110/50-60	P2	48	C4
			220/50-60	R5	110	C5
			230/50-60	P9		
			240/50-60	Q1		

To Order a Coil choose Coil Ref + Voltage Code, example: 492070 for 24 VDC = 492070C2

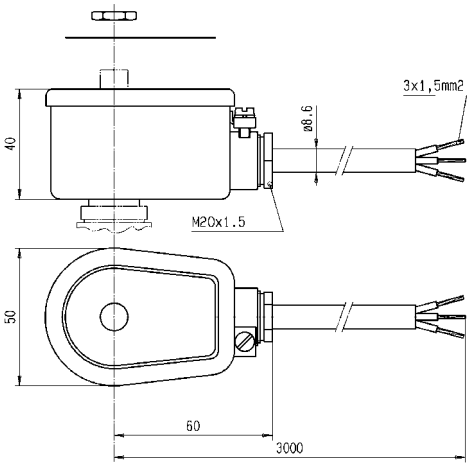

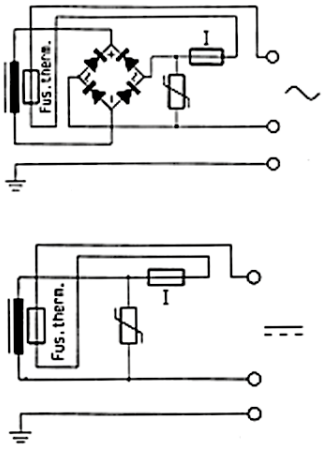

Coil Range

ZONE 1/21

COIL GROUP

2.0/2.1

EXPLOSION PROOF ELECTRICAL PARTS

INCREASED SAFETY AND
ENCAPSULATED ELECTRICAL PARTS "**eb mb**"

492190 - ELECTRICAL PARTS 50 mm

This coil can be mounted with every Parker ATEX solenoid valves corresponding to the specified Coil Group.

See column "Coil Group" within valve pages.

Application: Control of solenoid valves in dangerous areas where explosion-proof protection Ex eb mb IIC T3 to T4 is required.

Benefits: Rotatable 360°, fiberglass -reinforced plastic housing. Solenoid coil, rectifier (silicium diodes), fuses and varistor protection are completely encapsulated into the coil housing by epoxy resin for shock and corrosion protection. Small size for ease of mounting in confined space.

Reference			**492190**			
Certificate			**LCIE 02 ATEX 6023 X - IECEx LCI 06.0011 X**			
Coil Group			**2.0 / 2.1**			
Type of protection	**Gas**		II 2 G - Ex eb mb IIC T3 / T4			
	Dust		II 2 D - Ex tb IIIC - 195°C / 130°C			
Degree of protection			**IP66** according to IEC/EN 60529 Standards			
Ambient temperature			-40°C to +75°C / +40°C The operating temperature of the valve/coil can be limited by that of the valve			
Insulation Class			F 155°C			
Electrical connection			Connection box with terminals and cable entry via gland M20 x 1.5 Possibility for additional earth via external screw			
Electrical consumption	**DC**	**Pn** (hot)	9 W			
		P (cold) 20°C	11 W			
	AC	**Pn** (holding)	11 W			
		Attraction cold	13 W			
Weight			320 g			
Voltages "Un"			**VAC/Hz**	**Code**	**VDC**	**Code**
-10% to +10% of the Un			24/50-60	P0	24	C2
			110/50-60	P2	48	C4
			230/50-60	P9	110	C5

To Order a Coil choose Coil Ref + Voltage Code, example: 492190 for 24 VDC = 492190C2

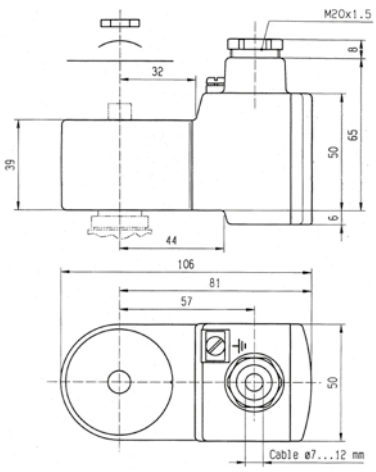

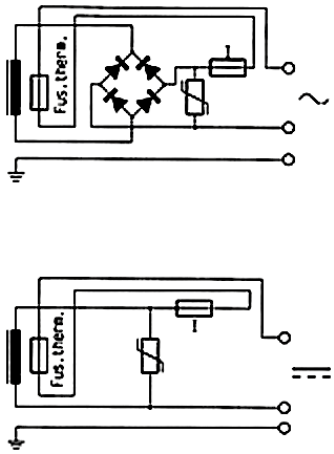

Coil Range

COIL GROUP

10.1

EXPLOSION PROOF ELECTRICAL PARTS

INCREASED SAFETY AND
ENCAPSULATED ELECTRICAL PARTS "**eb mb**"

ZONE 1/21

492310 - ELECTRICAL PARTS 50 mm

This coil can be mounted with every Parker ATEX solenoid valves corresponding to the specified Coil Group.

See column "Coil Group" within valve pages.

Application: Control of solenoid valves in dangerous areas where explosion-proof protection Ex eb mb II T4 to T5 is required.

Benefits: Rotatable 360° fibreglass-reinforced plastic housing. Solenoid coil, rectifier (silicium diodes), fuses and varistor protection are completely encapsulated into the coil housing by epoxy resin for shock and corrosion protection. Small size for ease of mounting in confined space.

Reference			**492310**			
Certificate			**LCIE 02 ATEX 6023 X - IECEx LCI 06.0011 X**			
Coil group			**10.1**			
Type of protection	**Gas**		II 2 G - Ex eb mb II T4 / T5			
	Dust		II 2 D - Ex tb IIIC - T130°C / T95°C			
Degree of protection			**IP66** according to IEC/EN 60529 Standards			
Ambiant temperature			-40°C to +75°C / to +40°C The operating temperature of the valve/coil can be limited by that of the valve			
Class of insulation			F 155°C			
Electrical connection			Connection box with terminals and cable entry via gland M20 x 1.5 - Possibility for additional earth via external screw.			
Elect. Power	**DC**	**Pn** (hot)	6 W			
		P (cold) 20°C	7.5 W			
	AC	**Pn** (holding)	6 W			
		Attraction cold	7.5 W			
Weight			500 g			
Voltages "Un"			**VAC/Hz**	**Code**	**VDC**	**Code**
-10% to +10% of the Un			24/50-60	P0	24	C2
			48/50-60	S4	48	C4
			230/50-60	P9	110	C5

To Order a Coil choose Coil Ref + Voltage Code, example: 492310 for 24 VDC = 492310C2

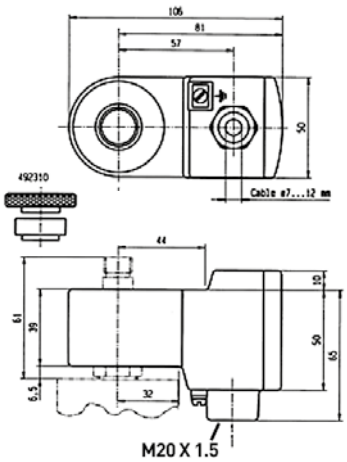

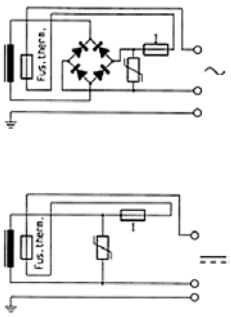

Coil Range

ZONE 1/21

COIL GROUP

10.3

EXPLOSION PROOF ELECTRICAL PARTS

FLAMEPROOF
ELECTRICAL PARTS "**db**"

497105 & 497105.02 - ELECTRICAL PARTS

These coils can be mounted with every Parker ATEX solenoid valves corresponding to the specified Coil Group.
See column "Coil Group" within valve pages.

Application: Control of solenoid valves in dangerous areas where explosion-proof protection Ex db IIC T4 / T5 / T6 is required.

Benefits: Rotatable 360°, stainless steel with internal and external screw terminals for earth connection. Small size for ease of mounting in confined space. Simplifies conversion of existing equipement to hazardous area requirements.

Reference			**497105 (M20x1.5)** **49710502 (NPT 1/2")**			
Certificate			**INERIS 12ATEX0041X - IECEx INE 12.0034X**			
Coil Group			**10.3**			
Type of protection		**Gas**	II 2 G - Ex db IIC T4 / T5 / T6			
		Dust	II 2 D - Ex tb IIIC - 130°C / 95°C / 80°C			
Degree of protection			**IP66** (with relevant cable gland) according to IEC/EN 60529 Standards			
Ambient temperature			-50°C to +80°C / +60°C / +40°C The operating temperature of the valve/coil can be limited by that of the valve			
Insulation Class			H 180°C			
Electrical connection			Electric connection is done in the connection chamber on an easily accessible connector terminals. The cable entry to the connection chamber is made through a 1/2" NPT or M20x1.5 thread in which an approved Exdb IIC cable gland must be installed.			
Electrical consumption	**DC**	**Pn** (hot)	8 W			
		P (cold) 20°C	9 W			
	AC	**Pn** (holding)	8 W			
		Attraction cold	9 W			
Voltage Tolerance			+/- 10% of nominal voltage			
Emergising Cuty			ED 100%			
Voltages			**VAC/Hz**	**Code**	**VDC**	**Code**
			24/50-60 110-115 / 50-60 220-230 / 50-60	P0 1P 3P	12 24 48 110	C1 C2 C4 C5

To Order a Coil choose Coil Ref + Voltage Code, example: 497105 for 24 VDC = 497105C2

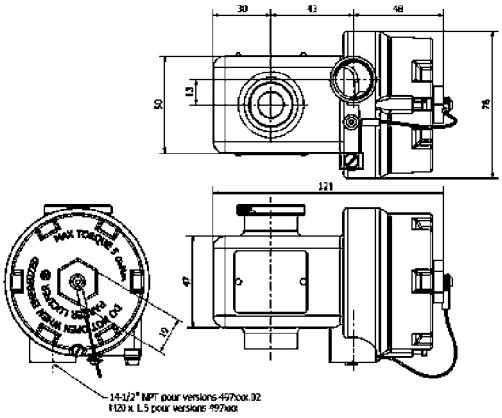

Coil Range

COIL GROUP

1.1

EXPLOSION PROOF ELECTRICAL PARTS

ENCAPSULATED
ELECTRICAL PARTS "**mb**"

ZONE 1/21

ELECTRICAL PART LOW POWER 22 mm

These coils can be mounted with every Parker ATEX solenoid valves corresponding to the specified Coil Group.

See column "Coil Group" within valve pages.

Application:
Control of solenoid valves in dangerous areas where explosion-proof protection Ex mb IIC T4 / T5 is required.

Benefits:
Coil and magnetic circuit encapsulated in synthetic material - offering shock and corrosion protection. AC coils with integrated thermal fuse. Small size for ease of mounting in confined spaces.

Reference			482605		482606 or 482606.160*			
Certificate			LCIE 02 ATEX 6014 X - IECEx LCI 07.0026 X					
Coil Group			1.1					
Type of protection	Gas		II 2 G - Ex mb IIC T4 / T5					
	Dust		II 2 D - Ex tb IIIC - T130°C / 95°C					
Degree of protection			**IP65** (with plug) according to IEC/EN 60529 Standards					
Ambiant temperature			-40°C to +65°C / +40°C The application is limited also by the temperature range of the valve.		-40°C to +65°C / +35°C			
Insulation Class			F 155°C					
Electrical connection			Cable connection (3 x 0.75 mm²) encapsulated with coil, cable material according to application					
Elect. Power	DC	**Pn** (hot)	5 W		2.5 W			
		P (cold) 20°C	6.5 W		3 W			
	AC	**Pn** (holding)	4 W		2 W			
		Attraction cold	8.9 VA (5 W)		5.7 VA (2.5 W)			
Weight			150 g					
Voltages "Un"			VDC	Code	VAC/Hz	Code	VDC	Code
-10% to +10% of the Un			12 24	C1 C2	24/50 48/50 110/50-115/50 220/50-230/50	A2 A4 0A 3D	24 48 110	C2 C4 C5

To Order a Coil choose Coil Ref + Voltage Code, example: 482605 for 24 VDC = 482605C2

* 482606.160 - 6 m cable length - available only in C2 and 3D
* 482606 - 1.5 m cable length

Fuses:
Both electrical parts 482605 & 482606 have to be connected in series with a safety fuse according to CEI 60127-3. Indicating example bellow:

482605:

DC: 12 V, 1000 mA - 24 V, 500 mA - 48 V, 200 mA - 110 V, 100 mA
AC 50 HZ: 24 V, 500 mA - 48 V, 250 mA - 110/115 V, 100 mA - 220/230 V, 3 mA
AC 60 Hz: 24 V, 630 mA - 110/115 V, 125 mA - 220/230 V, 63 mA

482606:

DC: 12 V, 400 mA - 24 V, 200 mA - 48 V, 100 mA - 110 V, 50 mA
AC 50 HZ: 24 V, 250 mA - 48 V, 125 mA - 110/115 V, 63 mA - 220/230 V, 32 mA
AC 60 Hz: 24 V, 315 mA - 110/115 V, 63 mA - 220/230 V, 32 mA

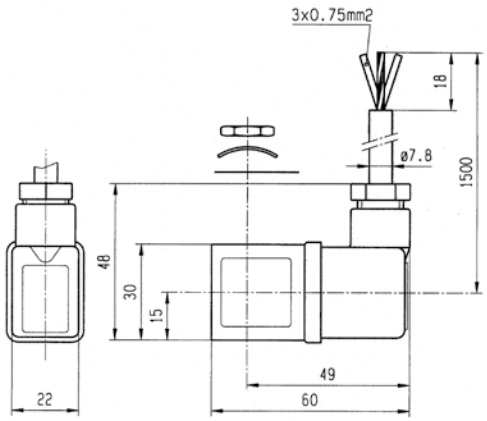

Coil Range

ZONE 0/20

COIL GROUP

7.0

EXPLOSION PROOF ELECTRICAL PARTS

INTRINSICALLY SAFE
ELECTRICAL PARTS "**ia**"

483580 - 483960 ELECTRICAL PARTS 32 mm "IS"

These coils can be mounted with every Parker ATEX solenoid valves corresponding to the specified Coil Group.
See column "Coil Group" within valve pages.

Application: Control of solenoid valves in dangerous areas where explosion-proof protection Ex ia IIC T6 is required.

Benefits: Fully encapsulated assembly comprising a coil, metal armature, three diodes circuit and DIN plug connection.
The encapsulation provides an effective compact housing offering full protection against dust, oil, water, etc. Small size for ease of mounting in confined space. Available only in 28 VDC (suffix code : N7)

Reference (without plug) (with plug)			**48358001 48396001**
Certificate			**LCIE 02 ATEX 6065 X - IECEx LCI 07.0025 X**
Coil Group			**7.0**
Type of protection	**Gas**		II 1 G - Ex ia IIC - T6
	Dust		II 1 D - Ex ta IIIC - T80°C
Degree of protection			**IP65** with plug according to IEC/EN 60529 Standards
Ambiant temperature			- 40°C à + 55°C The operating temperature of the valve/coil can be limited by that of the valve.
Electrical connection			The coil is connected with a 2P + E plug according to EN 175301-803 type A Contact 1 is marked as the positive pole ⊕.
Maximum supply voltage			28 VDC (N7) - 110 mA The minimum operating voltage at maximum 60°C is 14 VDC.
Power	**DC**	**Minimum**	500 mW
		Maximum	3 W
			Depending on applied voltage, IS barrier type and resistance of connected cable
Coil resistance at 20°C Impedance Apparent inductance Apparent capacitance			340 Ω 340 Ω 0 mH 0 µF
Weight			160 g (with plug)

To Order a Coil choose Coil Ref + Voltage Code, example: 483580 for 28 VDC = 483580N7

These coils must be used with suitable housings, see example below:

The coil assembly kit **Ref. 2995** corresponds to the "housing" of Lucifer® valve numbering system (Valve - housing - coil/voltage). It is composed of a nameplate giving details of the valve type, a round washer and a nut to ensure the fixing between 32 mm coil and the valve.

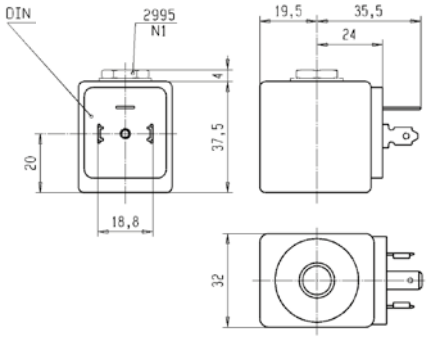

Important

The intrinsically safe supply circuit should have enough capacity in all environmental conditions to assure a **minimum operating current of 35 mA** through the coil.

The minimal holding current is 20 mA.

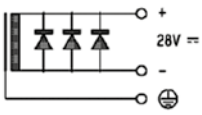

For the barrier compatibility see the corresponding table in in appendix section.

These coil must be used with suitable housing : **Ref. 2995**

Coil Range

COIL GROUP

8.0

EXPLOSION PROOF ELECTRICAL PARTS

INTRINSICALLY SAFE
ELECTRICAL PARTS "**ia**"

ZONE 0/20

495910 - MINIWATT - 0.3 W
ELECTRICAL PARTS "IS" "BOOSTER" 37 mm

These coils can be mounted with every Parker ATEX solenoid valves corresponding to the specified Coil Group.

See column "Coil Group" within valve pages.

Application: Control of solenoid valves in dangerous areas where explosion-proof protection Ex ia IIC T4 to T6 is required.

Benefits: Rotatable 360° fibreglass-reinforced plastic housing (class H). Solenoid coil, rectifier (silicium diodes), fuses and varistor protection are completely encapsulated into the coil housing by epoxy resin for shock and corrosion protection. Small size for ease of mounting in confined space. Available only in 28 VDC (code: N7).

Reference			495910
Certificate			LCIE 03 ATEX 6464 X - IECEx LCI 07.0006 X
Coil Group			8.0
Type of protection	Gas		II 1 G - Ex ia IIC - T4 / T5 / T6
	Dust		II 1 D - Ex ta IIIC T80 / 95 / 130°C
Degree of protection			**IP67** according to IEC/EN 60529 Standards
Ambiant temperature			- 40°C to +80°C / 75°C / 65°C The application is limited also by the temperature range of the valve..
Class of insulation			H 180°C
Electrical connection			Electric connection is done in the connection box on an easily accessible connector terminals. The introduction of the cable (Ø min 7 mm, Ømax. 11 mm, section max. 2.5 mm²) in the connection box passes by the built in M20 x 1.5 cable gland
Maximum supply voltage			28 VDC (N7) - 110 mA
Power	DC	Minimum	0.3 W (with 13 VDC)
		Maximum	1.2 W (with 24 VDC)
			Depending on applied voltage, IS barrier type and resistance of connected cable
Line check			4 mA or 5 VDC max
Coil resistance at 20°C Impedance Apparent inductance Apparent capacitance			Charge ~ 550 Ω - Holding ~ 500 Ω 0 mH 0 µF
Response time			2 - 3 s
Weight			500 g

To Order a Coil choose Coil Ref + Voltage Code, example: 495910 for 28 VDC = **495910N7**

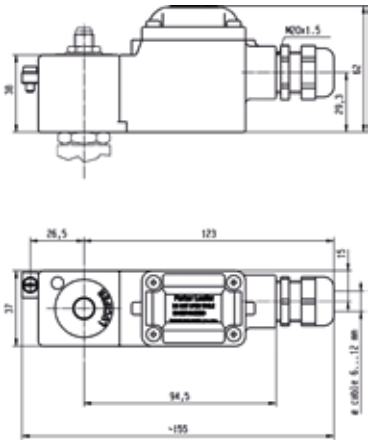

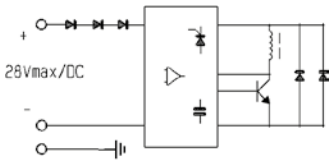

Coil Range

ZONE 0/20

COIL GROUP

9.0

EXPLOSION PROOF ELECTRICAL PARTS

INTRINSICALLY SAFE
ELECTRICAL PARTS "**ia**"

496565 ELECTRICAL PARTS "BOOSTER" "IS" 37 mm

This coil can be mounted with every Parker ATEX solenoid valves corresponding to the specified Coil Group.
See column "Coil Group" within valve pages.

Application: Control of solenoid valves in dangerous areas where explosion-proof protection Ex ia IIC T4 to T6 is required.

Benefits: Rotatable 360° fibreglass-reinforced plastic housing (class H).
Solenoid coil, rectifier (silicium diodes), fuses and varistor protection are completely encapsulated into the coil housing by epoxy resin for shock and corrosion protection. The plastic housing is delivered with M20 x 1.5 cable gland. Small size for ease of mounting in confined space.
Available only in 28 VDC (code: N7).

Reference		496565	
Certificate		LCIE 08 ATEX 6071 X - IECEx LCI 08.0030 X	
Coil group		9.0	
Type of protection	Gas	II 1 G - Ex ia IIC - T4 / T5 / T6	
	Dust	II 1 D - Ex ta IIIC - T80 / T95 /T130°C	
Degree of protection		**IP67** according to IEC/EN 60529 Standards	
Ambiant temperature		- 40°C to +80 / 75 / 65°C The application might also be limited by the temperature range of the valve.	
Electrical connection		Cable connection through a plastic cable gland M20 x 1.5 allowing use of cable diameter from 7 to 12 mm. Additional earth connection possible with external screw terminal.	
Class of insulation		H180°C	
Minimum Courant of function		20 mA	
Minimum voltage of function at 60°C		28 VDC (N7)	
Safety parameters Maximum acceptable values: Ui (V) / Ii (mA) / Pi (W)		28 V / 110 mA / 0.77 W 27 V / 120 mA / 0.81 W 26 V / 135 mA / 0.88 W 25 V / 150 mA / 0.94 W 24 V / 170 mA/ 1.02 W	28 V / 280 mA / 1.96 W 27 V / 320 mA / 2.16 W 26 V / 350 mA / 2.27 W 25 V / 390 mA / 2.43 W 24 V / 430 mA/ 2.58 W
Line check		4 mA or 5 VDC max	
Apparent Impedance Typ. Apparent Inductance Apparent Capacitance		Attraction ~ 600 Ω - Holding ~ 570 Ω 0 mH 0 µF	
Response Time Typ.		2 - 4 s	
Weight		500 g	

To Order a Coil choose Coil Ref + Voltage Code, example: 496565 for 28 VDC = 496565N7

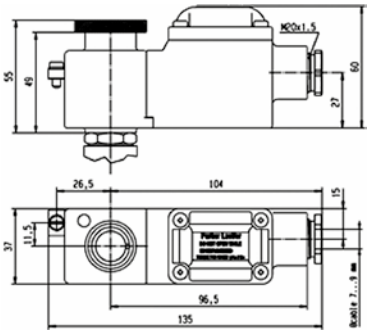

Coil Range

COIL GROUP

9.0

EXPLOSION PROOF ELECTRICAL PARTS

INTRINSICALLY SAFE
ELECTRICAL PARTS "**ia**"

ZONE 0/20

492965 ELECTRICAL PARTS "BOOSTER" "IS" 50 mm

This coil can be mounted with every Parker ATEX solenoid valves corresponding to the specified Coil Group.
See column "Coil Group" within valve pages.

Application: Control of solenoid valves in dangerous areas where explosion-proof protection Ex ia IIC - T6 is required.

Benefits: Rotatable 360° fibreglass-reinforced plastic housing. Solenoid coil, fuses and varistor protection are completely encapsulated into the coil housing by epoxy resin for shock and corrosion protection. Small size for ease of mounting in confined space. Simplifies conversion of existing equipment to hazardous area requirements. Small size for ease of mounting in confined space. Available only in 28 VDC.

Reference			**49296501 - (Stainless steel fixation)** **49296502 - (Plastic fixation)**
Certificate			**LCIE 02 ATEX 6066 X - IECEx LCI 07.0007 X**
Coil Group			**9.0**
Type of protection	**Gas**		II 1 G - Ex ia IIC - T6
	Dust		II 1 D - Ex ta IIIC - T80°C
Degree of protection			**IP66** according to IEC/EN 60529 Standards
Ambiant temperature			- 40°C to +65°C The application is limited also by the temperature range of the valve.
Electrical connection			Cable connection through a plastic or stainless steel cable gland M20 x 1.5 allowing use of cable diameter from 10 to 12 mm. Additional earth connection possible with external screw terminal.
Class of insulation			H180°C
Maximum supply voltage			28 VDC (N7) - 110 mA
Power	**DC**	**Minimum**	0.3 W (with 13 VDC)
		Maximum	2.3 W (with 24 VDC)
			Depending on applied voltage, IS barrier type and resistance of connected cable
Line check			4 mA or 5 VDC max
Coil resistance at 20°C **Impedance** **Apparent inductance** **Apparent capacitance**			85 Ω 275 Ω (with 13 VDC) - 260 Ω (with 24 VDC) 0 mH 0 µF
Response time			2 - 4 s
Weight			500 g

To Order a Coil choose Coil Ref + Voltage Code, example: 492965.01 for 28 VDC = 49296501N7

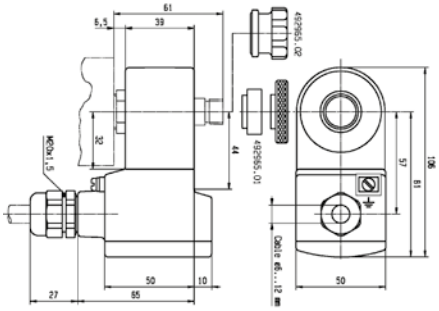

Important

The intrinsically safe supply circuit should have enough capacity in all environmental conditions to assure a **minimum operating current of 29 mA** through the coil.

The minimal holding current is 20 mA.

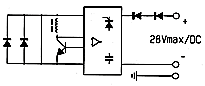

For the barrier compatibility see the corresponding table in appendix section.

Housing

COIL GROUP

4538

WATERPROOF AND DUSTPROOF HOUSING

Waterproof housing:

Reference:	4538
Material:	Epoxy vernished steel
Degree of protection:	**IP** according to IEC/EN 60529 **IP 67** with cable gland
Electrical connection:	Cable connection by cable gland M20x1.5 according to DIN 46320. Cable with outer diameter 6.5 - 13.5 mm can be simply sealed using a rubber gland with resilient sealing rings. The enclosure is internally and externally fitted with grounding and earthing screw terminals.
Weight:	180 g

Benefits:

This enclosure is dust- and waterproof. It corresponds to the degree of "International Protection" IP 67 according to IEC / EN 60529. Corrosion resistant, the metal housing offers good protection for the coil against shocks and other outside influences - rotatable 360° - easy mounting in confined spaces - easy access to the screw terminals - single-nut mounting - light weight - simple conversion of existing electrical equipment to other requirements without interruption of fluid passage in the valve.

Application:

This housing can be equipped with several coils of our range, like the standard, high temperature, double-frequency and magnetic latch coils.

Compatible coils:

- **481000 - Standard Coil**
  8 W Class F (155°C)
- **483520 - Double-Frequency Coil**
  9 W Class F (155°C)
- **486265 - High Temperature & High Power**
  14 W Class H (180°C)

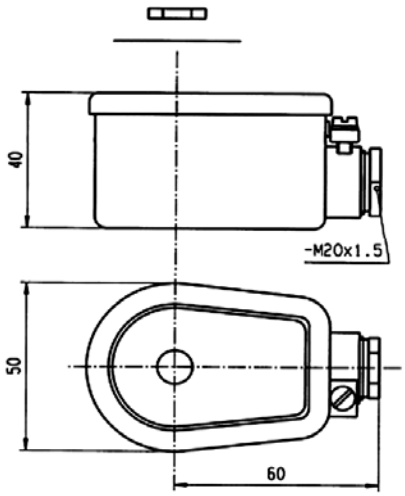

Parker's Motion & Control Technologies

At Parker, we're guided by a relentless drive to help our customers become more productive and achieve higher levels of profitability by engineering the best systems for their requirements. It means looking at customer applications from many angles to find new ways to create value. Whatever the motion and control technology need, Parker has the experience, breadth of product and global reach to consistently deliver. No company knows more about motion and control technology than Parker. For further info call 00800 27 27 5374

Aerospace

Key Markets

Aftermarket services
Commercial transports
Engines
General & business aviation
Helicopters
Launch vehicles
Military aircraft
Missiles
Power generation
Regional transports
Unmanned aerial vehicles

Key Products

Control systems & actuation products
Engine systems & components
Fluid conveyance systems & components
Fluid metering, delivery & atomization devices
Fuel systems & components
Fuel tank inerting systems
Hydraulic systems & components
Thermal management
Wheels & brakes

Climate Control

Key Markets

Agriculture
Air conditioning
Construction Machinery
Food & beverage
Industrial machinery
Life sciences
Oil & gas
Precision cooling
Process
Refrigeration
Transportation

Key Products

Accumulators
Advanced actuators
CO_2 controls
Electronic controllers
Filter driers
Hand shut-off valves
Heat exchangers
Hose & fittings
Pressure regulating valves
Refrigerant distributors
Safety relief valves
Smart pumps
Solenoid valves
Thermostatic expansion valves

Electromechanical

Key Markets

Aerospace
Factory automation
Life science & medical
Machine tools
Packaging machinery
Paper machinery
Plastics machinery & converting
Primary metals
Semiconductor & electronics
Textile
Wire & cable

Key Products

AC/DC drives & systems
Electric actuators, gantry robots & slides
Electrohydrostatic actuation systems
Electromechanical actuation systems
Human machine interface
Linear motors
Stepper motors, servo motors, drives & controls
Structural extrusions

Filtration

Key Markets

Aerospace
Food & beverage
Industrial plant & equipment
Life sciences
Marine
Mobile equipment
Oil & gas
Power generation & renewable energy
Process
Transportation
Water Purification

Key Products

Analytical gas generators
Compressed air filters & dryers
Engine air, coolant, fuel & oil filtration systems
Fluid condition monitoring systems
Hydraulic & lubrication filters
Hydrogen, nitrogen & zero air generators
Instrumentation filters
Membrane & fiber filters
Microfiltration
Sterile air filtration
Water desalination & purification filters & system

Fluid & Gas Handling

Key Markets

Aerial lift
Agriculture
Bulk chemical handling
Construction machinery
Food & beverage
Fuel & gas delivery
Industrial machinery
Life sciences
Marine
Mining
Mobile
Oil & gas
Renewable energy
Transportation

Key Products

Check valves
Connectors for low pressure fluid conveyance
Deep sea umbilicals
Diagnostic equipment
Hose couplings
Industrial hose
Mooring systems & power cables
PTFE hose & tubing
Quick couplings
Rubber & thermoplastic hose
Tube fittings & adapters
Tubing & plastic fittings

Hydraulics

Key Markets

Aerial lift
Agriculture
Alternative energy
Construction machinery
Forestry
Industrial machinery
Machine tools
Marine
Material handling
Mining
Oil & gas
Power generation
Refuse vehicles
Renewable energy
Truck hydraulics
Turf equipment

Key Products

Accumulators
Cartridge valves
Electrohydraulic actuators
Human machine interfaces
Hybrid drives
Hydraulic cylinders
Hydraulic motors & pumps
Hydraulic systems
Hydraulic valves & controls
Hydrostatic steering
Integrated hydraulic circuits
Power take-offs
Power units
Rotary actuators
Sensors

Pneumatics

Key Markets

Aerospace
Conveyor & material handling
Factory automation
Life science & medical
Machine tools
Packaging machinery
Transportation & automotive

Key Products

Air preparation
Brass fittings & valves
Manifolds
Pneumatic accessories
Pneumatic actuators & grippers
Pneumatic valves & controls
Quick disconnects
Rotary actuators
Rubber & thermoplastic hose & couplings
Structural extrusions
Thermoplastic tubing & fittings
Vacuum generators, cups & sensors

Process Control

Key Markets

Alternative fuels
Biopharmaceuticals
Chemical & refining
Food & beverage
Marine & shipbuilding
Medical & dental
Microelectronics
Nuclear Power
Offshore oil exploration
Oil & gas
Pharmaceuticals
Power generation
Pulp & paper
Steel
Water/wastewater

Key Products

Analytical Instruments
Analytical sample conditioning products & systems
Chemical injection fittings & valves
Fluoropolymer chemical delivery fittings, valves & pumps
High purity gas delivery fittings, valves, regulators & digital flow controllers
Industrial mass flow meters/ controllers
Permanent no-weld tube fittings
Precision industrial regulators & flow controllers
Process control double block & bleeds
Process control fittings, valves, regulators & manifold valves

Sealing & Shielding

Key Markets

Aerospace
Chemical processing
Consumer
Fluid power
General industrial
Information technology
Life sciences
Microelectronics
Military
Oil & gas
Power generation
Renewable energy
Telecommunications
Transportation

Key Products

Dynamic seals
Elastomeric o-rings
Electro-medical instrument design & assembly
EMI shielding
Extruded & precision-cut, fabricated elastomeric seals
High temperature metal seals
Homogeneous & inserted elastomeric shapes
Medical device fabrication & assembly
Metal & plastic retained composite seals
Shielded optical windows
Silicone tubing & extrusions
Thermal management
Vibration dampening

ENGINEERING YOUR SUCCESS.

Parker Worldwide

AE – UAE, Dubai
Tel: +971 4 8127100
parker.me@parker.com

AR – Argentina, Buenos Aires
Tel: +54 3327 44 4129

AT – Austria, Wiener Neustadt
Tel: +43 (0)2622 23501-0
parker.austria@parker.com

AT – Eastern Europe,
Wiener Neustadt
Tel: +43 (0)2622 23501 900
parker.easteurope@parker.com

AU – Australia, Castle Hill
Tel: +61 (0)2-9634 7777

AZ – Azerbaijan, Baku
Tel: +994 50 2233 458
parker.azerbaijan@parker.com

BE/LU – Belgium, Nivelles
Tel: +32 (0)67 280 900
parker.belgium@parker.com

BR – Brazil, Cachoeirinha RS
Tel: +55 51 3470 9144

BY – Belarus, Minsk
Tel: +375 17 209 9399
parker.belarus@parker.com

CA – Canada, Milton, Ontario
Tel: +1 905 693 3000

CH – Switzerland, Etoy
Tel: +41 (0)21 821 87 00
parker.switzerland@parker.com

CL – Chile, Santiago
Tel: +56 2 623 1216

CN – China, Shanghai
Tel: +86 21 2899 5000

CZ – Czech Republic, Klecany
Tel: +420 284 083 111
parker.czechrepublic@parker.com

DE – Germany, Kaarst
Tel: +49 (0)2131 4016 0
parker.germany@parker.com

DK – Denmark, Ballerup
Tel: +45 43 56 04 00
parker.denmark@parker.com

ES – Spain, Madrid
Tel: +34 902 330 001
parker.spain@parker.com

FI – Finland, Vantaa
Tel: +358 (0)20 753 2500
parker.finland@parker.com

FR – France, Contamine s/Arve
Tel: +33 (0)4 50 25 80 25
parker.france@parker.com

GR – Greece, Athens
Tel: +30 210 933 6450
parker.greece@parker.com

HK – Hong Kong
Tel: +852 2428 8008

HU – Hungary, Budapest
Tel: +36 1 220 4155
parker.hungary@parker.com

IE – Ireland, Dublin
Tel: +353 (0)1 466 6370
parker.ireland@parker.com

IN – India, Mumbai
Tel: +91 22 6513 7081-85

IT – Italy, Corsico (MI)
Tel: +39 02 45 19 21
parker.italy@parker.com

JP – Japan, Tokyo
Tel: +81 (0)3 6408 3901

KR – South Korea, Seoul
Tel: +82 2 559 0400

KZ – Kazakhstan, Almaty
Tel: +7 7272 505 800
parker.easteurope@parker.com

MX – Mexico, Apodaca
Tel: +52 81 8156 6000

MY – Malaysia, Shah Alam
Tel: +60 3 7849 0800

NL – The Netherlands,
Oldenzaal
Tel: +31 (0)541 585 000
parker.nl@parker.com

NO – Norway, Asker
Tel: +47 66 75 34 00
parker.norway@parker.com

NZ – New Zealand, Mt Wellington
Tel: +64 9 574 1744

PL – Poland, Warsaw
Tel: +48 (0)22 573 24 00
parker.poland@parker.com

PT – Portugal, Leca da Palmeira
Tel: +351 22 999 7360
parker.portugal@parker.com

RO – Romania, Bucharest
Tel: +40 21 252 1382
parker.romania@parker.com

RU – Russia, Moscow
Tel: +7 495 645-2156
parker.russia@parker.com

SE – Sweden, Spånga
Tel: +46 (0)8 59 79 50 00
parker.sweden@parker.com

SG – Singapore
Tel: +65 6887 6300

SK – Slovakia, Banská Bystrica
Tel: +421 484 162 252
parker.slovakia@parker.com

SL – Slovenia, Novo Mesto
Tel: +386 7 337 6650
parker.slovenia@parker.com

TH – Thailand, Bangkok
Tel: +662 717 8140

TR – Turkey, Istanbul
Tel: +90 216 4997081
parker.turkey@parker.com

TW – Taiwan, Taipei
Tel: +886 2 2298 8987

UA – Ukraine, Kiev
Tel +380 44 494 2731
parker.ukraine@parker.com

UK – United Kingdom,
Warwick
Tel: +44 (0)1926 317 878
parker.uk@parker.com

US – USA, Cleveland
Tel: +1 216 896 3000

VE – Venezuela, Caracas
Tel: +58 212 238 5422

ZA – South Africa,
Kempton Park
Tel: +27 (0)11 961 0700
parker.southafrica@parker.com

Ed. 2016-04

Stainless Steel Catalog FCDE/0111/UK - 04/2016

European Product Information Centre
Free phone: 00 800 27 27 5374
(from AT, BE, CH, CZ, DE, EE, ES, FI, FR, IE, IL, IS, IT, LU, MT, NL, NO, PT, SE, SK, UK)
US Product Information Centre
Free phone: 1-800-27 27 537
www.parker.com